4-A-1

A 14335

NOTE: FOLLOW SHEER FORWARD & DETAIL LINE AFT KEEPING A 8" MARGIN TO RUB RAIL. EXTEND FROM 24" FORWARD OF HOUSE, TO AFT END OF AFT HOUSE.

MATERIAL TO BE TEAK, MINIMUM 8' LENGTH.
TOTAL LENGTH 33'-6" P&S

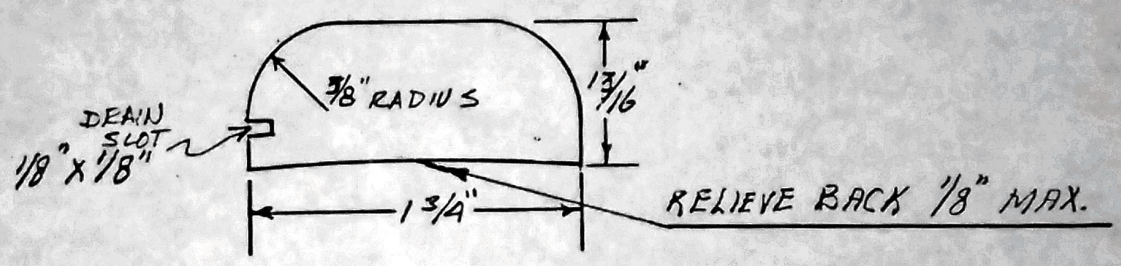


| NO | DESCRIPTION | QTY | NO | DESCRIPTION | QTY |
|---|---|---|---|---|---|
| | | | | | |

WESTSAIL CORP., COSTA MESA, CA.

SCALE FULL
DRAWN JC
DATE 4-21

TITLE 42 RUB RAIL DETAIL

A 14335

REVISED

A 24003 A

SEE NOTE NEXT PAGE

## RUBRAIL INSTALLATION:

A) DRILL NO. 10 SCREW HOLES 12" APART.

B) BED SCREW HOLES WITH (3).

C) LOCATE TOP EDGE OF RUB RAIL 8 1/2" BELOW BOTTOM EDGE OF CAP RAIL ON W42 & W43, 8 1/4" ON W32, 6 3/4" ON W28.

| | QTY | PART NUMBER | DESCRIPTION | ITEM |
|---|---|---|---|---|
| W28 | 2 | 14305 | RUBRAIL, TEAK 27' L.G. | 5 |
| W32, W42, W43 → | 2 | 14335 | RUBRAIL, TEAK 33' 6" L.G. | 4 |
| | 2 tbs | 14409 | CAULKING, POLYSULFIDE | (3) |
| W32, W42, W43 | 66 | 10292 | SCREW, FHSMS, SS, #10 x 1" | 2 |
| ON W28 USE: 54 | 66 | 14117 | PLUG, TEAK, 3/8" | 1 |

PARTS OR MATERIAL LIST

WESTSAIL®
275 McCormick, P.O. Box 1828
Costa Mesa, California 92626
Telephone: (714) 549-9711

WSP, RUBRAIL INSTAL'N

| DRAWN | DATE | MANUAL PAGE NUMBER |
|---|---|---|
| PAK | 6/76 | |

| LTR | ENG. CHANGE NO. | DATE | NEXT ASSY | USED ON |
|---|---|---|---|---|
| A | 438 | PAK 6/76 | | |

REVISIONS

APPLICATION

| SIZE | DWG. NO. | REV. |
|---|---|---|
| A | 24003 | A |

SCALE NONE

SHEET 1 OF 1

4-A-3

A 24011 A

# WSP-RUBRAIL INSTALLATION.

IT WILL NO LONGER BE NECESSARY TO THRU BOLT RUBRAILS.
FASTEN THEM WITH #14 x 1½" LG STAINLESS STEEL, SHEET METAL SCREWS.
COAT SCREWS WITH DOLFINITE BEFORE FASTENING.
SPACE SCREWS AT SAME DISTANCE AS BOLTS.

| QTY | PART NUMBER | DESCRIPTION | ITEM |
|---|---|---|---|

PARTS OR MATERIAL LIST

WESTSAIL®
275 McCormick, P.O. Box 1828
Costa Mesa, California 92626
Telephone: (714) 549-9711

WSP-RUBRAIL INSTALLATION.

| DRAWN | DATE | MANUAL PAGE NUMBER |
|---|---|---|
| RUDY | 3-07-76 | |

| LTR | ENG. CHANGE NO. | DATE | NEXT ASSY | USED ON |
|---|---|---|---|---|
| A | ECO #537 | 8-10-78 | | W28, W32, W42, W45 |

REVISIONS

APPLICATION

| SIZE | DWG. NO. | REV. |
|---|---|---|
| A | 24011 | A |

SCALE NONE

SHEET 1 OF 1

4-B-2

A | 17195 | C

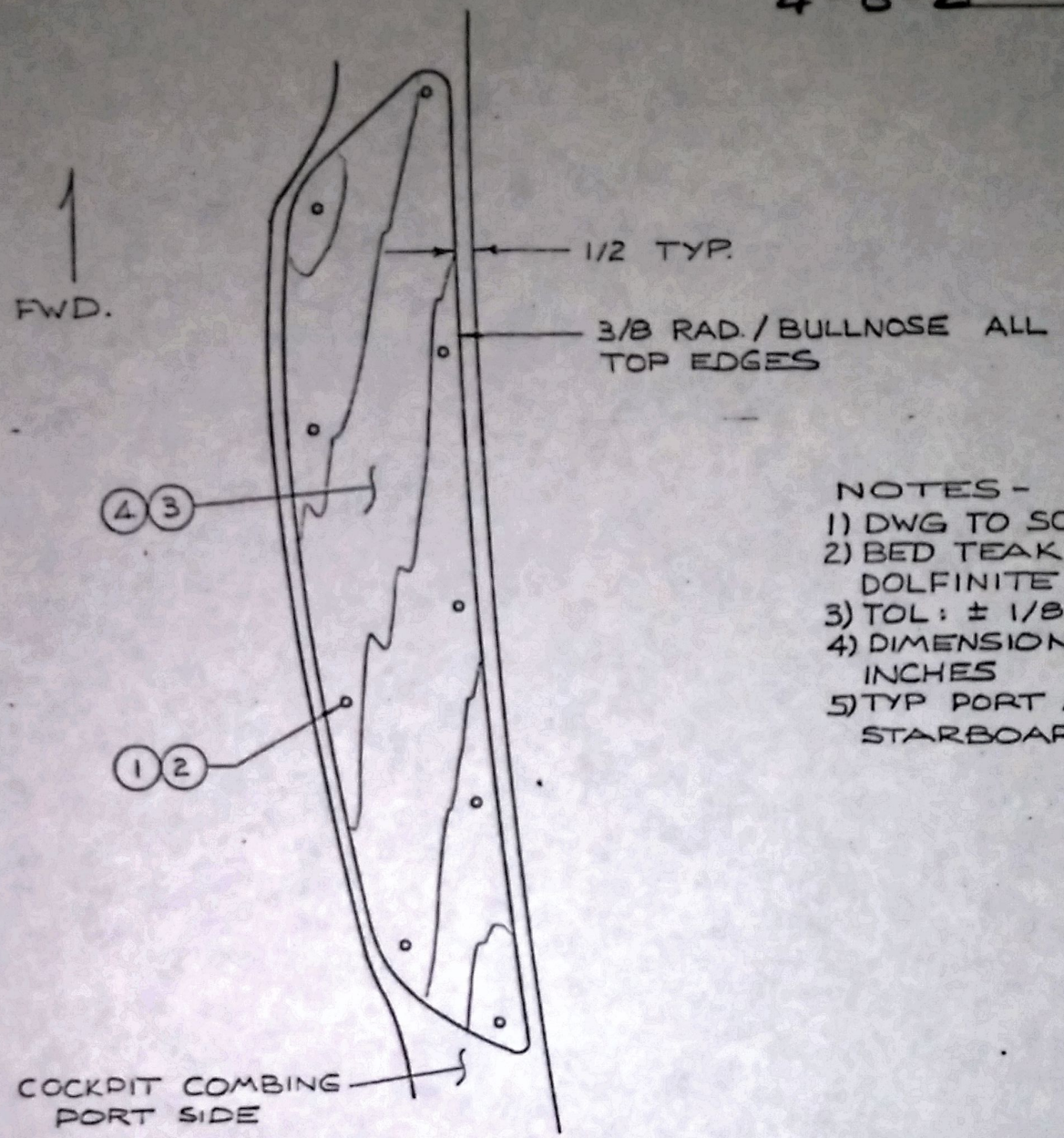


NOTES -
1) DWG TO SCALE
2) BED TEAK WITH DOLFINITE
3) TOL: ± 1/8
4) DIMENSIONS IN INCHES
5) TYP PORT AND STARBOARD

| QTY | PART NUMBER | DESCRIPTION | ITEM |
|---|---|---|---|
| 2 | 14415 | CAULKING, DOLFINITE | 4 |
| 6.25 BFT | 14186 | WOOD, TEAK 4/4 | 3 |
| 18 | 10294 | SCREW PHSMS SS 10×1 | 2 |
| 18 | 14117 | PLUG TEAK 3/8 | 1 |

PARTS OR MATERIAL LIST

WESTSAIL®
275 McCormick, P.O. Box 1828
Costa Mesa, California 92626
Telephone: (714) 549-9711

COMBING, COCKPIT TEAK W43

| DRAWN | DATE | MANUAL PAGE NUMBER |
|---|---|---|
| PHIL ARNOLD | 9/76 | |

| LTR | ENG. CHANGE NO. | DATE |
|---|---|---|
| C | ECO 580 | 9/76 |

REVISIONS

| NEXT ASSY | USED ON |
|---|---|
| | W43 |

APPLICATION

SCALE 1/8" = 1'

| SIZE | DWG NO. | REV. |
|---|---|---|
| A | 17195 | C |

SHEET 1 OF 1

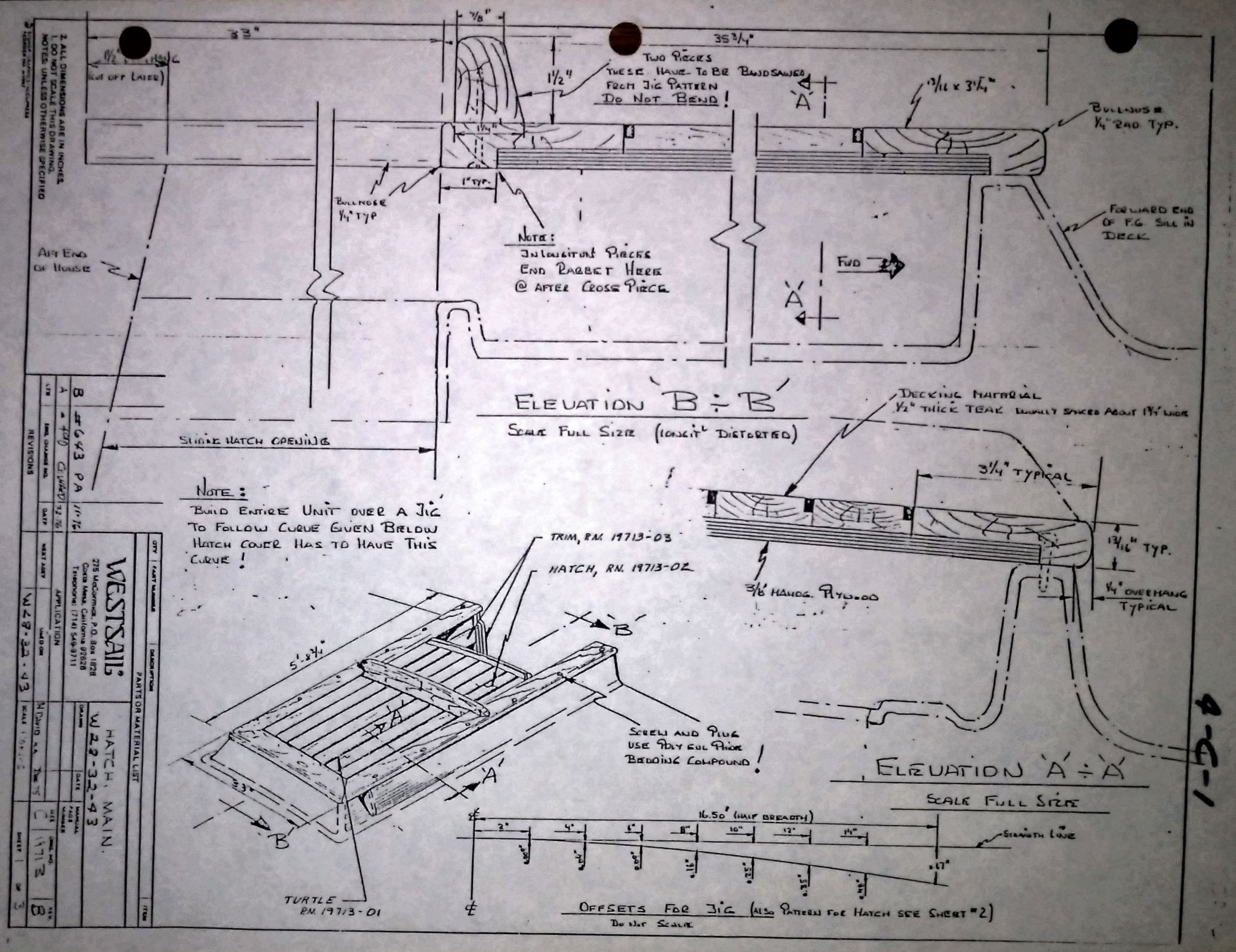
2. ALL DIMENSIONS ARE IN INCHES.
1. DO NOT SCALE THIS DRAWING.
NOTES: UNLESS OTHERWISE SPECIFIED
3'3"
7/8"
35 3/4"
1/2" (CUT OFF LATER)
1 1/2"
TWO PIECES
THESE HAVE TO BE BANDSAWED FROM JIG PATTERN
DO NOT BEND!
'A'
13/16 x 3 1/4"
BULLNOSE 1/4" RAD TYP.
1 1/4"
1" TYP.
BULLNOSE 1/4" TYP
NOTE:
INTERMEDIATE PIECES END RABBET HERE @ AFTER CROSS PIECE
FORWARD END OF F.G. SILL IN DECK
AFT END OF HOUSE
FWD
'A'
ELEVATION 'B÷B'
SCALE FULL SIZE (LONGIT' DISTORTED)
DECKING MATERIAL
1/2" THICK TEAK USUALLY SPACED ABOUT 1 1/4" WIDE
SLIDE HATCH OPENING
3 1/4" TYPICAL
13/16" TYP.
1/4" OVERHANG TYPICAL
3/8" MAHOG. PLYWOOD
NOTE:
BUILD ENTIRE UNIT OVER A JIG TO FOLLOW CURVE GIVEN BELOW HATCH COVER HAS TO HAVE THIS CURVE!
TRIM, P.N. 19713-03
HATCH, P.N. 19713-02
'B'
5'-8 3/4"
'A'
3.3"
'B'
'A'
SCREW AND PLUG USE POLY SUL PRIOR BEDDING COMPOUND!
TURTLE P.N. 19713-01
ELEVATION 'A÷A'
SCALE FULL SIZE
16.50' (HALF BREADTH)
2" 4" 6" 8" 10" 12" 14"
STRAIGHT LINE
.17"
OFFSETS FOR JIG (ALSO PATTERN FOR HATCH SEE SHEET #2)
DO NOT SCALE
B #643 PA
A 4-19 CHANGED 12-76
11-76
REVISIONS
LTR
DWG CHANGE NO.
DATE
NEXT ASSY
USED ON
APPLICATION
WESTSAIL
275 McCormick, P.O. Box 1828
Costa Mesa, California 92626
Telephone: (714) 549-3711
W28-32-43
M. DAVID
SCALE 1"=1'-0"
HATCH, MAIN.
W28-32-43
DRAWN
DATE
FINISH
MATERIAL
NUMBER
SHEET 1 OF 2
C
19713
QTY
PART NUMBER
DESCRIPTION
PARTS OR MATERIAL LIST
ITEM
8-5-1

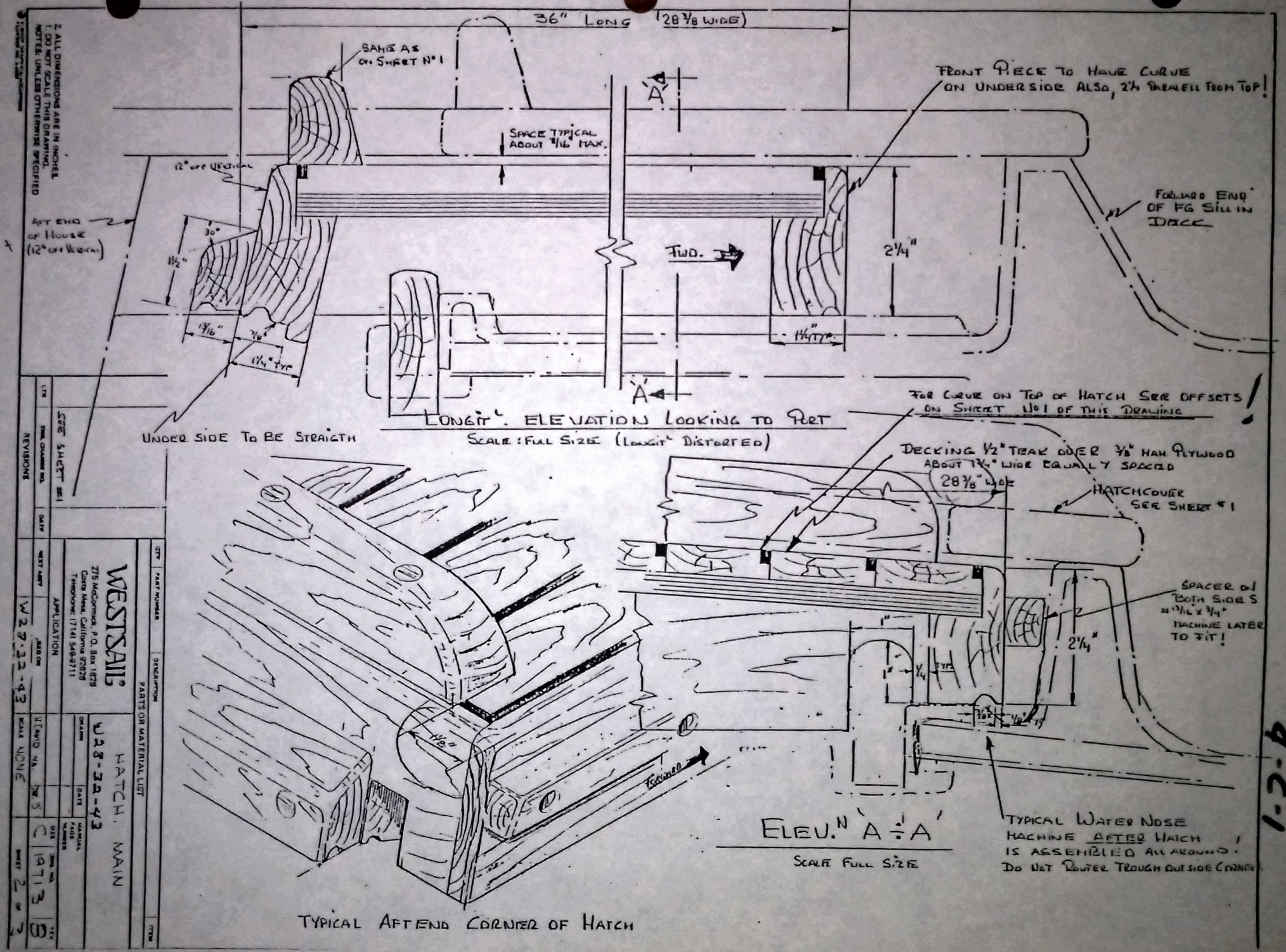
36" LONG (28 7/8 WIDE)
SAME AS ON SHEET N° 1
FRONT PIECE TO HAVE CURVE ON UNDERSIDE ALSO, 2¼ PARALLEL FROM TOP!
SPACE TYPICAL ABOUT 3/16" MAX.
12° OFF VERTICAL
AFT END OF HOUSE (12° OFF VERTICAL)
30°
1½"
13/16"
7/8"
1¼" TYP
FWD.
2¼"
1¼" TYP
FORWARD END OF FG SILL IN DECK
UNDER SIDE TO BE STRAIGTH
LONGIT'. ELEVATION LOOKING TO PORT
SCALE: FULL SIZE (LONGIT' DISTORTED)
FOR CURVE ON TOP OF HATCH SEE OFFSETS ON SHEET No 1 OF THIS DRAWING!
DECKING ½" TEAK OVER ⅜" MAH. PLYWOOD ABOUT 7¼" WIDE EQUALLY SPACED
28 7/8" WIDE
HATCHCOVER SEE SHEET #1
SPACER ON BOTH SIDES ≈ 13/16" x ¾" MACHINE LATER TO FIT!
2¼"
1"
¼" TYP
1/8" TYP
1/8" TYP
1½"
FORWARD
ELEV.N 'A÷A'
SCALE FULL SIZE
TYPICAL WATER NOSE MACHINE AFTER HATCH IS ASSEMBLED ALL AROUND! DO NOT ROUTER TROUGH OUTSIDE CORNER
TYPICAL AFT END CORNER OF HATCH
NOTES: UNLESS OTHERWISE SPECIFIED
1. DO NOT SCALE THIS DRAWING.
2. ALL DIMENSIONS ARE IN INCHES.
REVISIONS
LTR
ZONE CHANGE NO.
DATE
NEXT ASSY
USED ON
W27-32-43
SEE SHEET #1
APPLICATION
WESTSAIL
275 McCormick, P.O. Box 1828
Costa Mesa, California 92626
Telephone: (714) 548-9711
DRAWN
DATE
MATERIAL PAGE NUMBER
QTY
PART NUMBER
DESCRIPTION
PARTS OR MATERIAL LIST
ITEM
HATCH, MAIN
W28-32-43
SCALE NONE
DRAWN
DATE
SIZE
C
DWG NO.
1973
REV
SHEET 2 OF 2
4.3.1

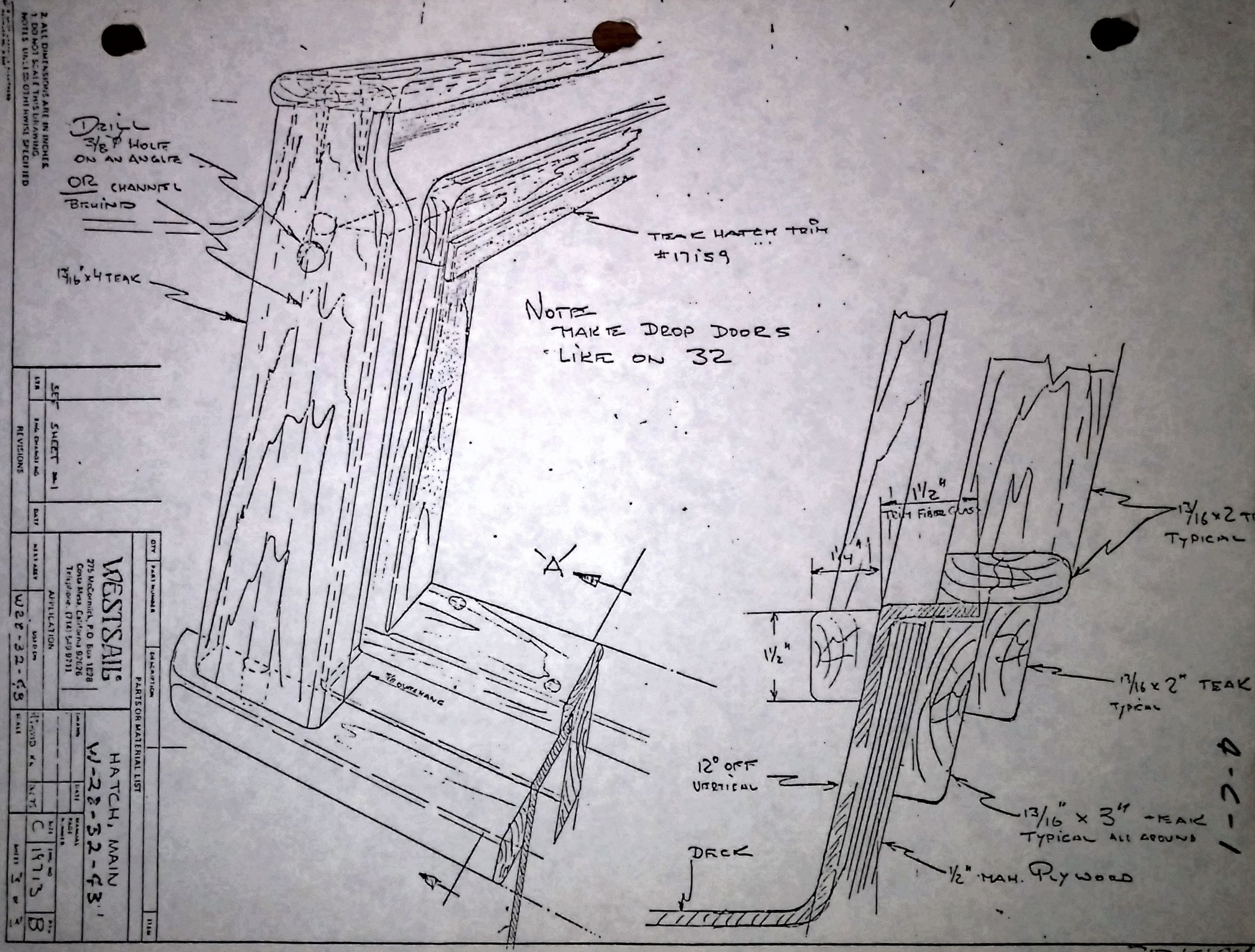
2. ALL DIMENSIONS ARE IN INCHES
1. DO NOT SCALE THIS DRAWING
NOTES UNLESS OTHERWISE SPECIFIED
DRILL 3/8" HOLE ON AN ANGLE
OR CHANNEL BEHIND
13/16" x 4 TEAK
TEAK HATCH TRIM #17159
NOTE MAKE DROP DOORS LIKE ON 32
A
1 1/2"
TRIM FIBRE GLASS
1 1/4"
1 1/2"
13/16 x 2 TEAK TYPICAL
13/16 x 2" TEAK TYPICAL
12° OFF VERTICAL
13/16" x 3" TEAK TYPICAL ALL AROUND
DECK
1/2" MAH. PLYWOOD
REVISIONS
SEE SHEET #1
ASSEMBLY
W28-32-F8
APPLICATION
WESTSAIL
275 McCormick, P.O. Box 1228
Costa Mesa, California 92626
Telephone (714) 549 9711
PARTS OR MATERIAL LIST
HATCH, MAIN
W-28-32-F8
C
19713
B
1/2" = 1'-0"

4-C-H

A 24022

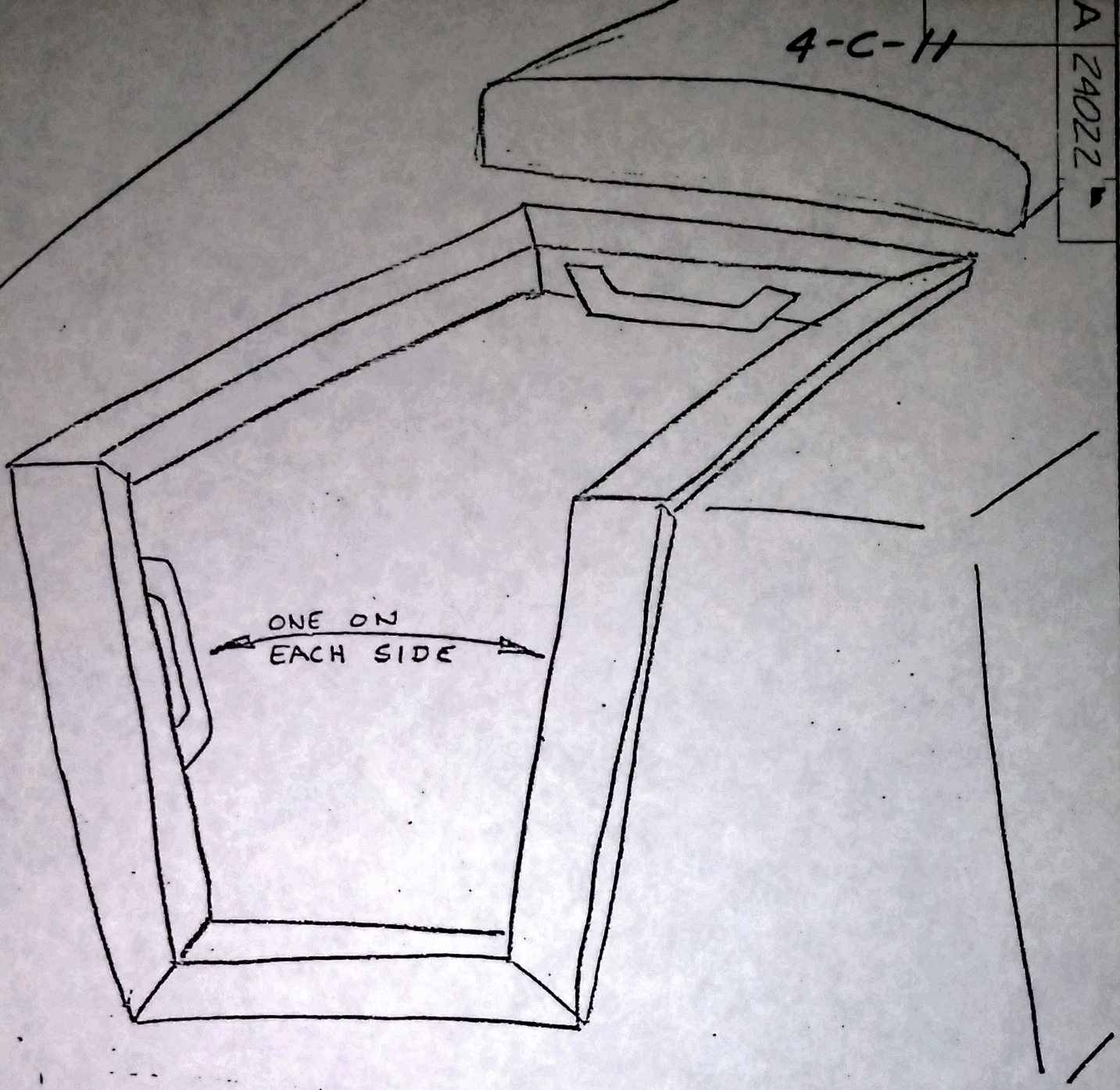


WSP- INSTALL (3) SINGLE LOOP GRAB RAILS IN THE COMPANION-WAY OF ALL COMPLETE BOATS.

| QTY | PART NUMBER | DESCRIPTION | ITEM |
|---|---|---|---|

PARTS OR MATERIAL LIST

WESTSAIL®
275 McCormick, P.O. Box 1828
Costa Mesa, California 92626
Telephone: (714) 549-9711

WSP - GRABRAILS, IN COMPANIONWAY

| DRAWN | DATE | MANUAL PAGE NUMBER |
|---|---|---|
| G. WARD | 11/1/76 | |

| LTR | ENG. CHANGE NO. | DATE |
|---|---|---|
| A | #618 GAW | 11/1/76 |

REVISIONS

| NEXT ASSY | USED ON |
|---|---|
| | 28, 32, 42, 1 |

APPLICATION

| SIZE | DWG NO. | REV. |
|---|---|---|
| A | 24022 | A |

SCALE NONE

SHEET 1 OF 1

14[illegible]62 MASTER

5-23

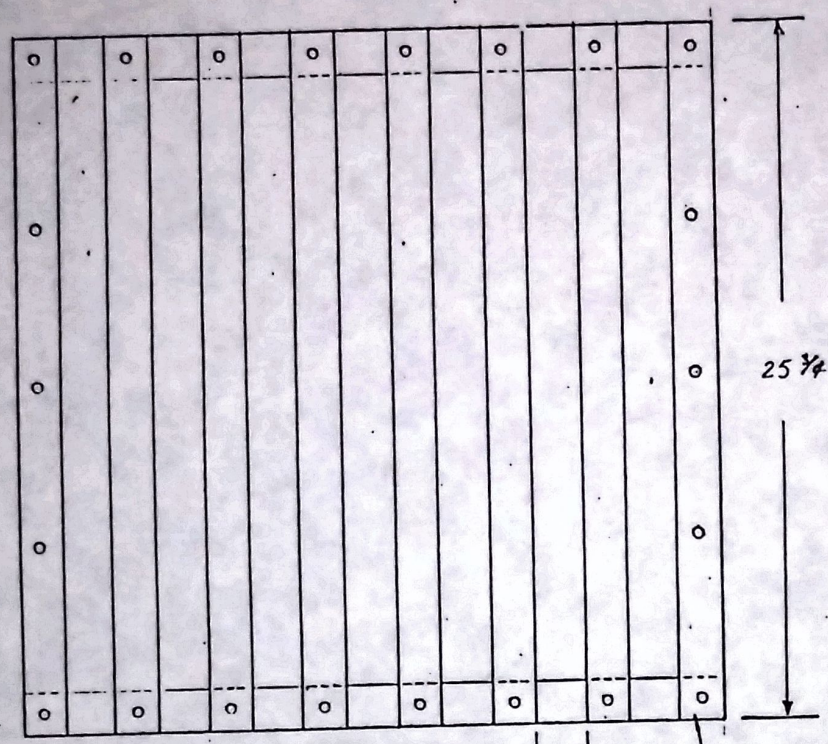


MAT'L:
(1) 1 3/4 x 8" x 5' TEAK } (10) BD FT
(1) 1 3/4 x 8" x 28" TEAK FOR STAYS
(8) #10 x 2 1/2 FH BRONZE WOOD SCREW
(16) #10 x 1 3/4 FH BRONZE WOOD SCREW
(24) 3/8 TEAK PLUGS
1/8 QT RESORCIN L. GLUE
(1) TUBE POLYSULFIDE BLACK CAULKING
1/2" x 24 3/4 x 24 3/4 PLEXIGLASS

(14) #10 x 1" FH BRONZE WOOD SCREWS

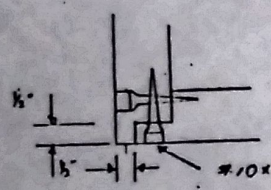


TYPICAL CORNER

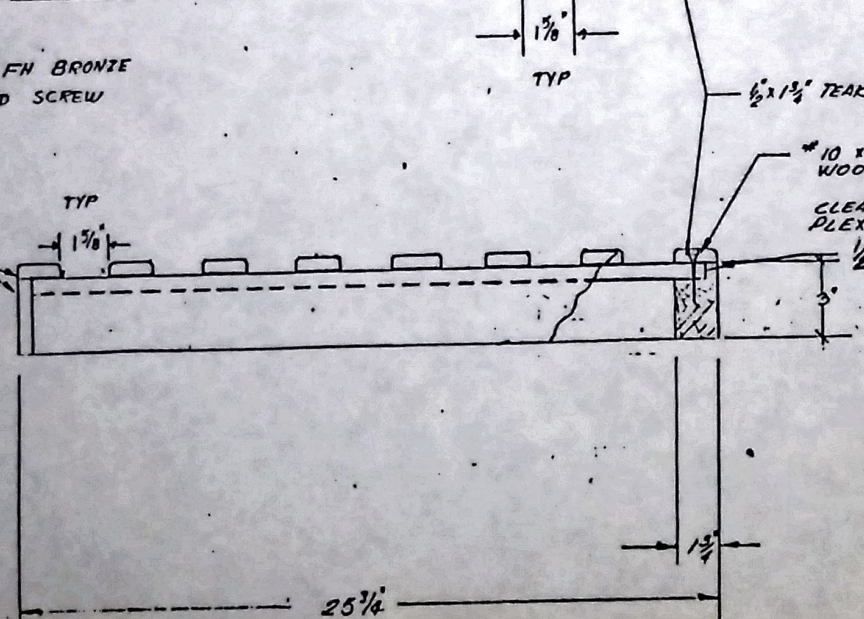


4-D-1

| | |
|---|---|
| TOLERANCES (UNLESS OTHERWISE NOTED) | WESTSAIL CORP. |
| DECIMAL | SCALE 1/4 |
| FRACTIONAL | TITLE TEAK TRAVELER HATCH |
| ANGULAR | DATE / DRAWING NUMBER |

| LTR | REVISION | DATE | APPROVED |
|---|---|---|---|
| A | RELEASED | 10/11/75 | |

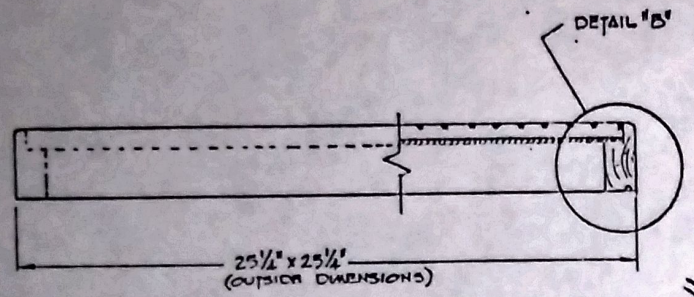


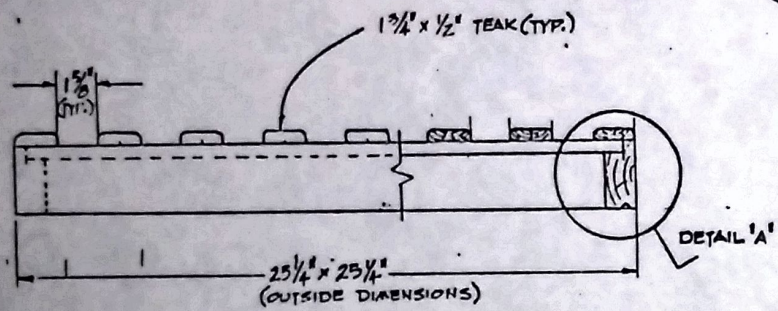


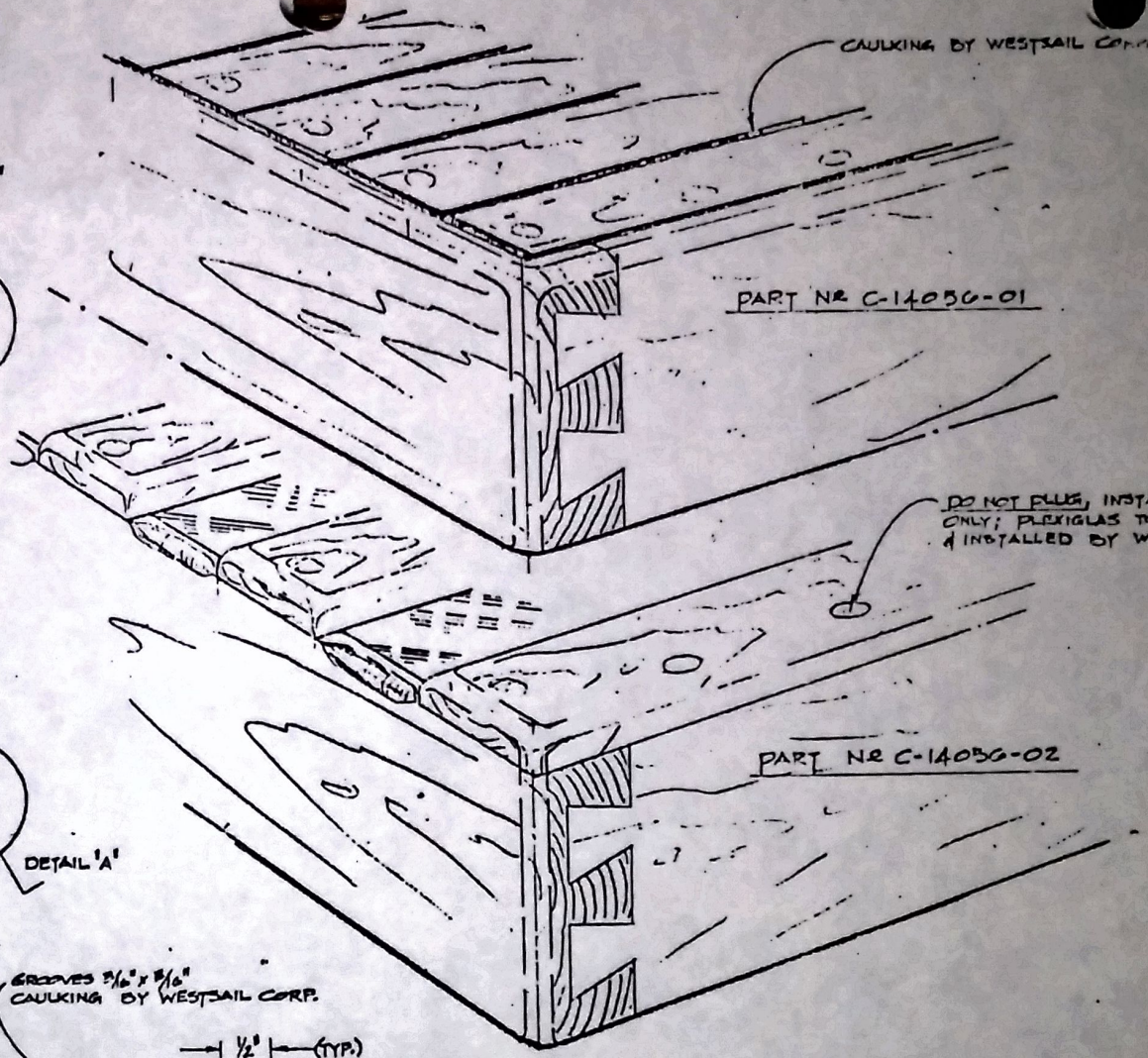


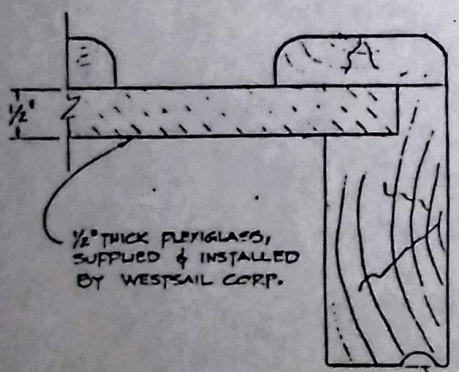


DETAIL "A"
SCALE: FULL

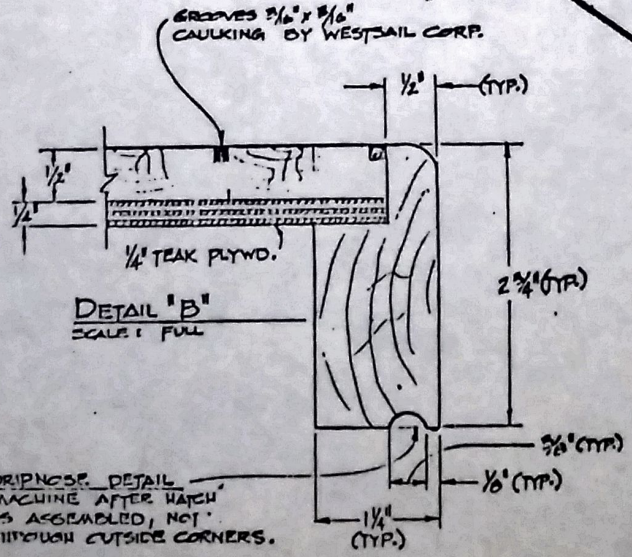


DETAIL "B"
SCALE: FULL

6. TAG WITH PART Nº C-14056-01 OR C-14056-02.
5. FINISH: SANDED ONLY, DO NOT OIL.
4. ALL SCREWS SHALL BE MINIMUM #14 x 2" BRONZE.
3. ALL GLUE SHALL BE MARINE GRADE PHENOLIC.
2. MAKE FROM FIRST GRADE TEAK 1¼" THICK, WITHOUT CHECKS OR WINDBREAKS.
1. ALL DIMENSIONS IN INCHES & FRACTIONS

NOTES – UNLESS OTHERWISE SPECIFIED

4-D-1

| | | |
|---|---|---|
| UNLESS OTHERWISE SPECIFIED DIMENSIONS ARE IN INCHES ¼" | WESTSAIL CORP. 276 McCORMICK, COSTA MESA, | |
| | HATCHES, TEAK, | IN-2A W-42 W-43 |
| | NOTED / C / 14056 | |
| | DO NOT SCALE DRAWING | SHEET 1 OF |

| REVISIONS | | | |
|---|---|---|---|
| LTR | DESCRIPTION | DATE | APPROVED |
| A | RELEASED | 1/21/75 | S. Long |
| B | ECO #65 | 7/16/76 | |

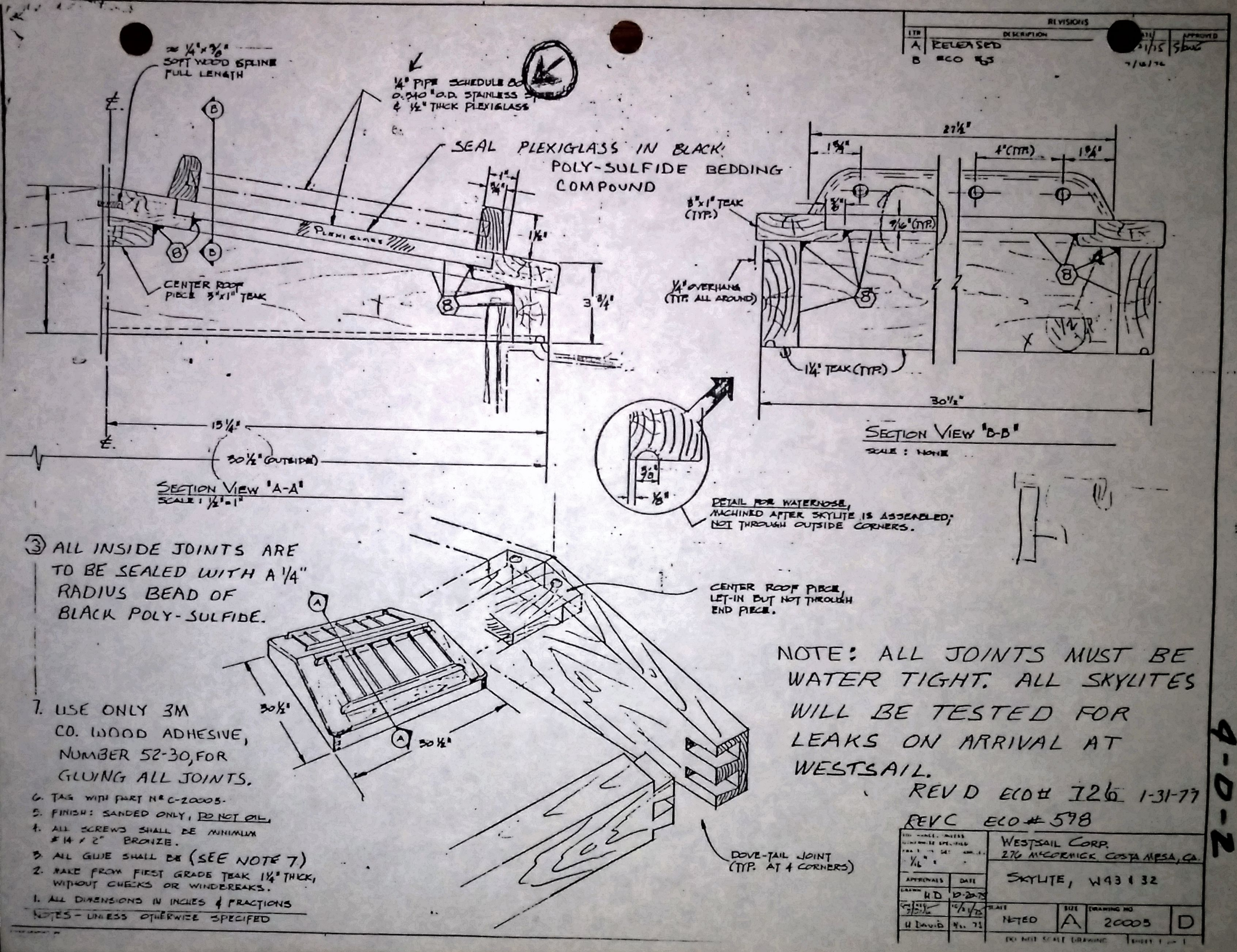


③ ALL INSIDE JOINTS ARE TO BE SEALED WITH A 1/4" RADIUS BEAD OF BLACK POLY-SULFIDE.

7. USE ONLY 3M CO. WOOD ADHESIVE, NUMBER 52-30, FOR GLUING ALL JOINTS.
6. TAG WITH PART Nº C-20005.
5. FINISH: SANDED ONLY, DO NOT OIL.
4. ALL SCREWS SHALL BE MINIMUM #14 x 2" BRONZE.
3. ALL GLUE SHALL BE (SEE NOTE 7)
2. MAKE FROM FIRST GRADE TEAK 1 1/4" THICK, WITHOUT CHECKS OR WINDBREAKS.
1. ALL DIMENSIONS IN INCHES & FRACTIONS

NOTES - UNLESS OTHERWISE SPECIFIED

NOTE: ALL JOINTS MUST BE WATER TIGHT. ALL SKYLITES WILL BE TESTED FOR LEAKS ON ARRIVAL AT WESTSAIL.

REV D ECO # 726 1-31-77

REV C ECO # 598

| | | |
|---|---|---|
| ±1/16" | | WESTSAIL CORP. 276 McCORMICK COSTA MESA, CA. |
| APPROVALS | DATE | SKYLITE, W43 & 32 |
| DRAWN H.D. | 12-20-73 | |
| 12/20/73 | 12/20/73 | SCALE NOTED · SIZE A · DRAWING NO 20005 · D |
| H. David | Nov. 75 | |

DO NOT SCALE DRAWING · SHEET 1 OF 1

4-D-2

4-E-2

A 14078 B

## STD. SCUPPER

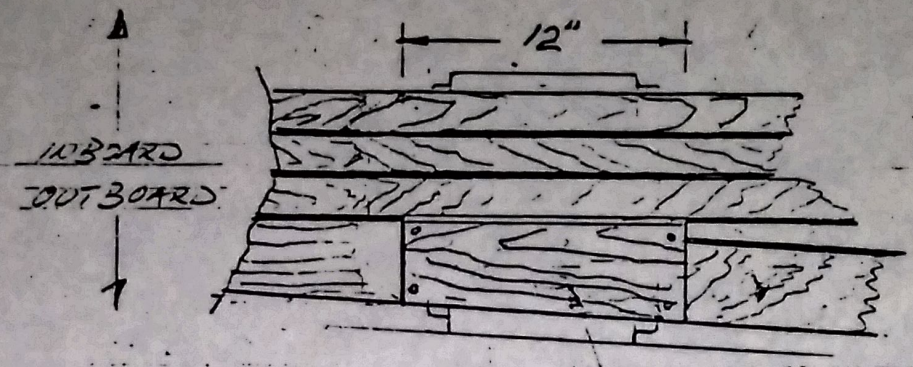


WEDGE SHAPE

NOTE:
IN CASE OF A TEAK DECK, CONTINUE DECK STRIPS AND MAKE REMOVABLE WEDGE PIECE AT COVERBOARD

STD. TEAK DECKING

## U.S. SCUPPER

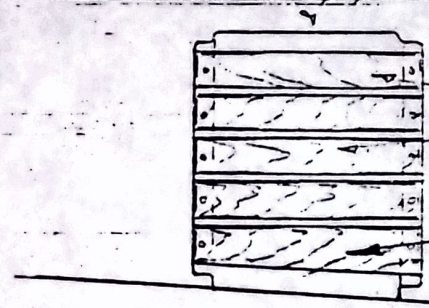


GRATING ONLY

W/TEAK DECKING

NOTE:
IN CASE OF A FIBERGLASS DECK, USE 1½"X 5/8" TEAK SLATS TO FABRICATE GRATING OVER SCUPPER
USE SCREWS & PLUGS

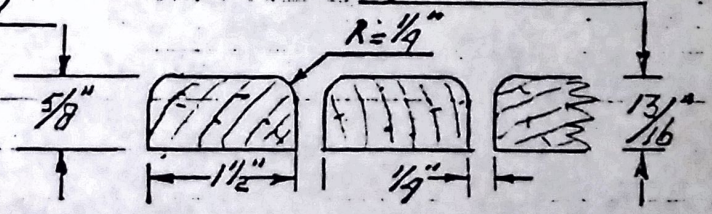


DETAIL SCUPPER SLATS

SCALE 6"=1'-0"

| NO | DESCRIPTION | QTY | NO | DESCRIPTION | QTY |
|---|---|---|---|---|---|
| | | | | | |
| | | | | | |
| | | | | | |
| | | | | | |
| | | | | | |

WESTSAIL CORP., COSTA MESA, CA.

SCALE 1½:1-0
DRAWN K.G.
DATE 5-74

TITLE SCUPPER GRATING

A 14078 B

REVISED 2-19-75 AP

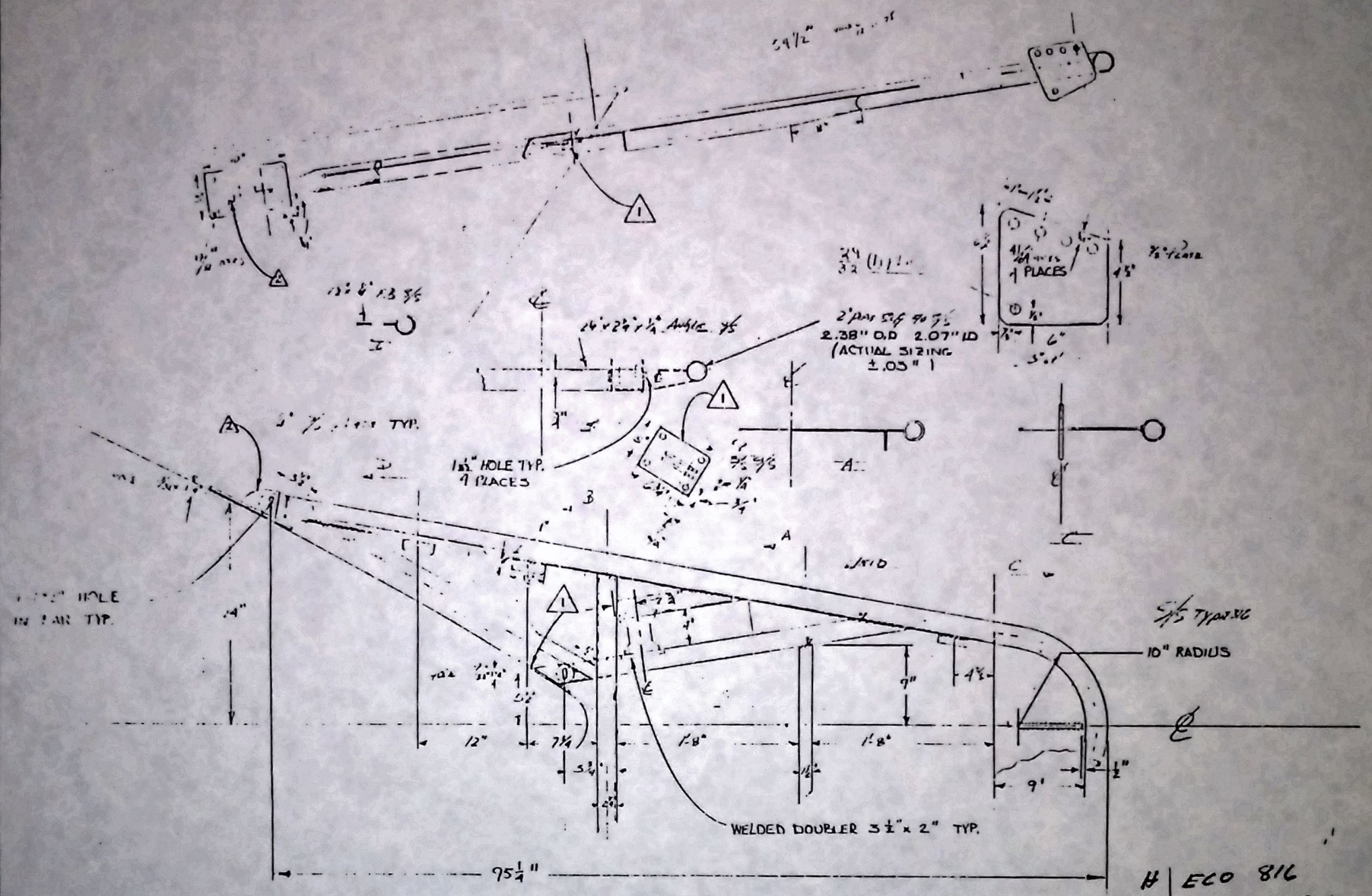


NOTE:
INSTALL ALL SHARP EDGES FINISH TO SURFACE. BEAT TRANS OF FWD ATTACHMENTS TO BE SPHERICAL FROM PATTERN

NOTES:
1) TOLERANCES ± 1/8.
2) ELECTRO-POLISH FINISHED PART.
3) ALL WELDS TO BE 1/4" FILLETS.
4) USE 1/4" 304 S.S. UNLESS OTHERWISE NOTED.
5) REFER TO DWG A13466 FOR DIMENSIONS
6) DO NOT TAKE DIMENSIONS FOR FWD. BRACKET FROM THIS DRAWING, REFER TO DRAWING A-19572.

| # | ECO 816 SEE PAGE 1 | | |
|---|---|---|---|
| E | ECO# 506 | PAK | 7/13/76 |
| D | ECO # 426 | PAK | 6/3/76 |
| C | ECO # [illegible] | [illegible] | [illegible] |
| B | ECO # 269 | G. WARD | 3-23-76 |

WESTSAIL CORP.
275 McCORMICK, COSTA MESA, CA.

SCALE: 1" = 1'-0" | APPROVED BY: | DRAWN BY: [illegible]
DATE: Apr 6 1972 | REVISED

PULPIT, BOW AND SPRIT ASS'Y

REVISED NUMBER

A-F-1

W-42 4-F-1

HARDWARE TO MOUNT
BOW & STERN PULPITS

BOW

| QTY | P/N | DESCRIPTION | COST | TOTAL COST |
|---|---|---|---|---|
| 8 | 10323 | 1/2 x 13 x 2 1/2 : Hex BOLTS S-S | .38 ea | 3.04 |
| 8 | 10110 | 1/2" x 13 x 2" Hex BOLTS S.S. | .30 ea | 2.40 |
| 16 | 10175 | 1/2" x 13 Hex NUTS | .19 ea | 3.04 |
| 16 | 10136 | 1/2" FLATWASHERS S-S | .07 ea | 1.12 |
| 16 | 10137 | 1/2" LOCKWASHERS S-S | .06 ea | .96 |
| | | | | 10.56 |

STERN

| | | | | |
|---|---|---|---|---|
| 18 | 10039 | 1/4" x 20 x 3" RHMS S-S | .13 ea | 2.34 |
| 18 | 10162 | 1/4" x 20 Hex NUTS S-S | .04 ea | .72 |
| | 10125 | 1/4" FLAT WASHERS S-S | .02 ea | .36 |
| 18 | 10126 | 1/4" LOCK WASHERS S-S. | .02 ea | .36 |
| | | | | 3.78 |

BOW PULPIT (BOWSPRIT) TO HULL FITTINGS

| | | | | |
|---|---|---|---|---|
| 4 | 1011 | 1/2 x 13 x 2" Hex BOLT S-S | .30 ea | 1.20 |
| 4 | 10175 | 1/2 x 13 Hex NUT S-S | .19 ea | .76 |
| 4 | 10136 | 1/2" FLAT WASHER S-S | .07 ea | .28 |
| 4 | 10137 | 1/2" LOCKWASHER S-S | .06 ea | .24 |
| | | | | 2.48 |

4-F-1

18350

# W42 - Bow Sprit & Pulpit

| TY | | DESCRIPTION | PART # | | |
|---|---|---|---|---|---|
| | 2 | Brz.Rollers | 13259 | | |
| 8.2 | B/ft. | Teak | 14186 | | |
| 57 | — | 1¼" x ¼" - 20 F.H.M.S. s.s. | 10025 | | |
| 57 | | ¼" Lock Nuts s.s. | 10163 | | |
| | | Pulpit s.s. | A13494 | | |

| | | | |
|---|---|---|---|
| VARSIXAIL CORP., COSTA MESA, CA. | SCALE | TITLE | A 18350 |
| | DRAWN bap | Bow Sprit & Pulpit W42 | REVISED |
| | DATE 6/12/75 | | |

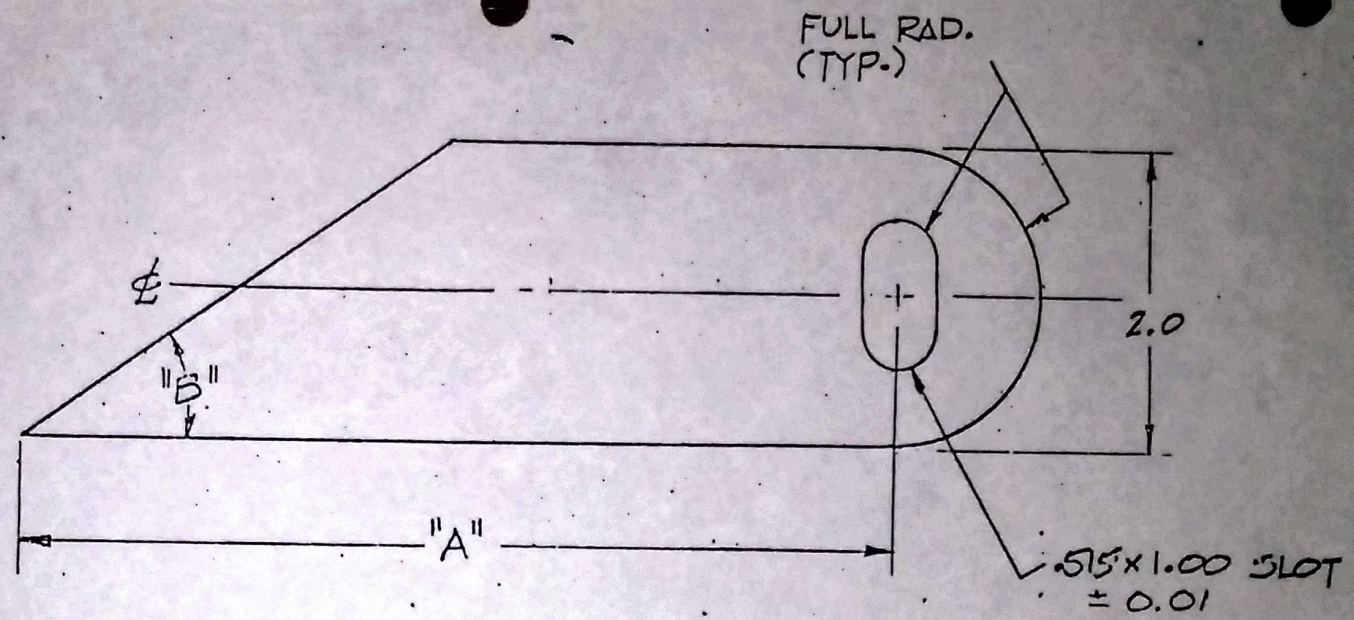


| STRAP | "A" | "B" |
|---|---|---|
| #1 | 10.0 | 22° |
| #2 | TAKE FROM PART | 22° |
| #3 | 10.0 | 22° |
| #4 | TAKE FROM PART | 22° |

6. ONE SET OF FWD BRACKETS: P.U. 19572-00
5. RUBBER STAMP OR TAG w/ PART No. 19572-01 STBD., 19572-02 PORT
4. REMOVE ALL BURRS & BREAK SHARP EDGES.
3. MAKE FROM #304 STAINLESS STEEL .25 THK.
2. TOLERANCE: ±.050, ANGLES ±1°.
1. ALL DIMENSIONS IN INCHES.

NOTES- UNLESS OTHERWISE SPECIFIED

SHEET 1 OF 3

| | |
|---|---|
| SCALE NONE | TITLE BRACKET, BOW PULPIT W-42 W43 |
| DRAWN DN | |
| DATE 11-14-75 | |
| A | 19572- |
| C | |

ECOLOGY PRODUCTS CORP., COSTA MESA, CA.

9-5-1

| | |
|---|---|
| A | 19572 |

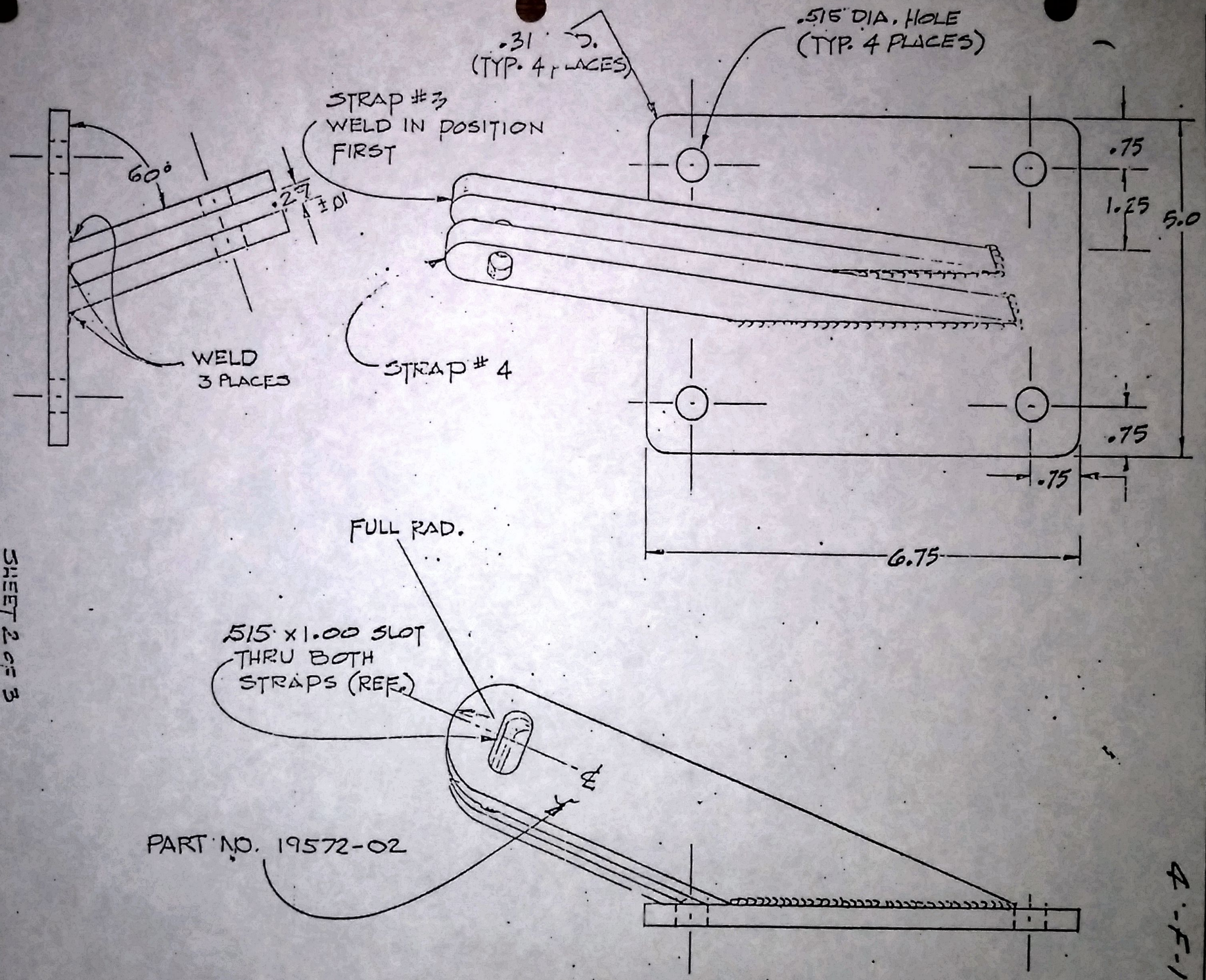


CONTROL DATA
CORP., COSTA MESA, CA.

SCALE 1/2=1"
DRAWN
DATE 11-14-73

TITLE
BRACKET, BOWPULPIT
(FORT)

SHEET 2 OF 3

A | 19572- | C

NOTES ON SHT 1 OF 3

A-F-1

A | 19572 | C

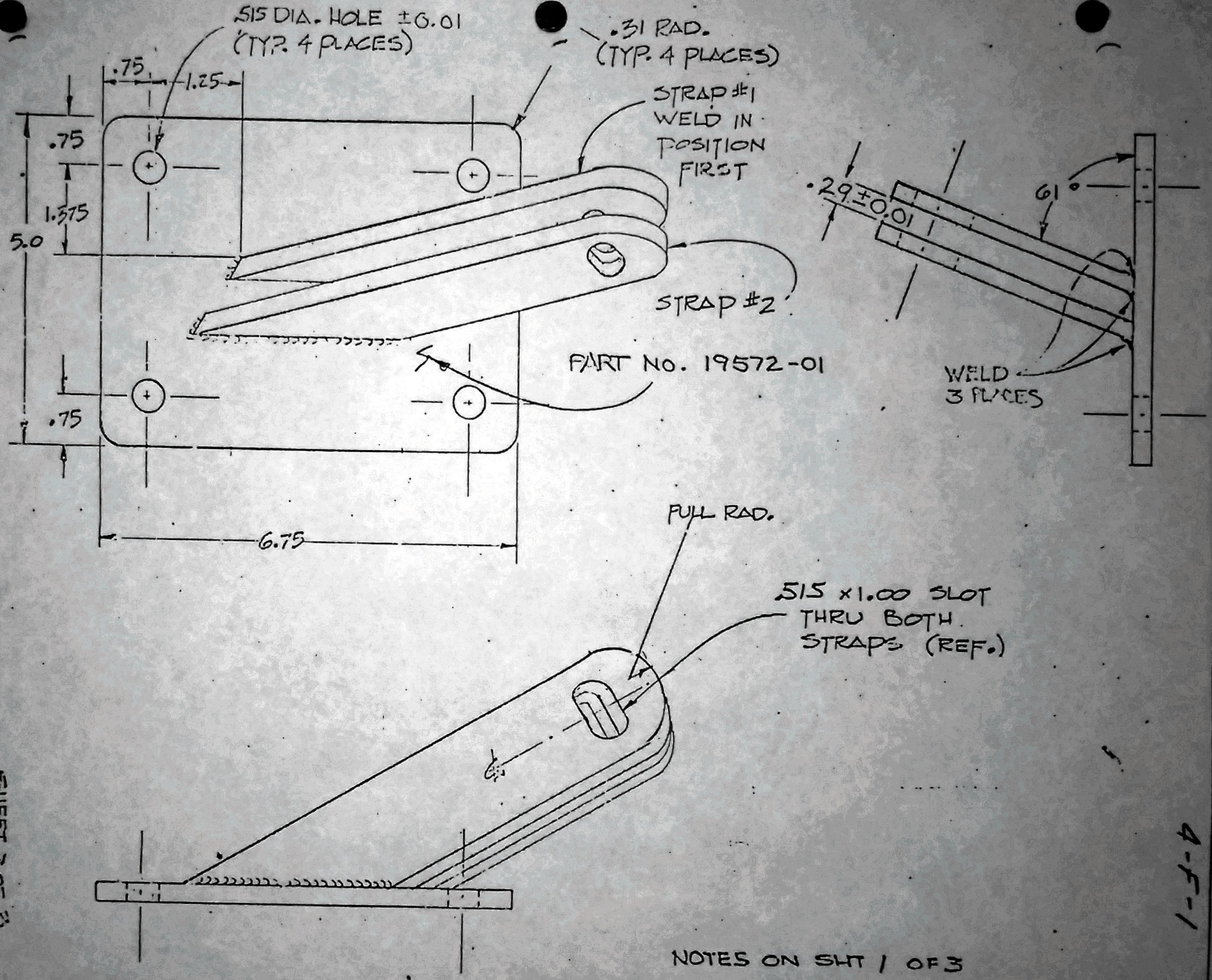


NOTES ON SHT 1 OF 3

| | | | |
|---|---|---|---|
| A | 19572- | C | |

TITLE BRACKET, BONPUMPIT (STARBOARD)

SCALE 1/2=1.00
DRAWN
DATE 11-14-78

SHEET 3 OF 3

4-F-1

4-F-1 | A | 13466 | A

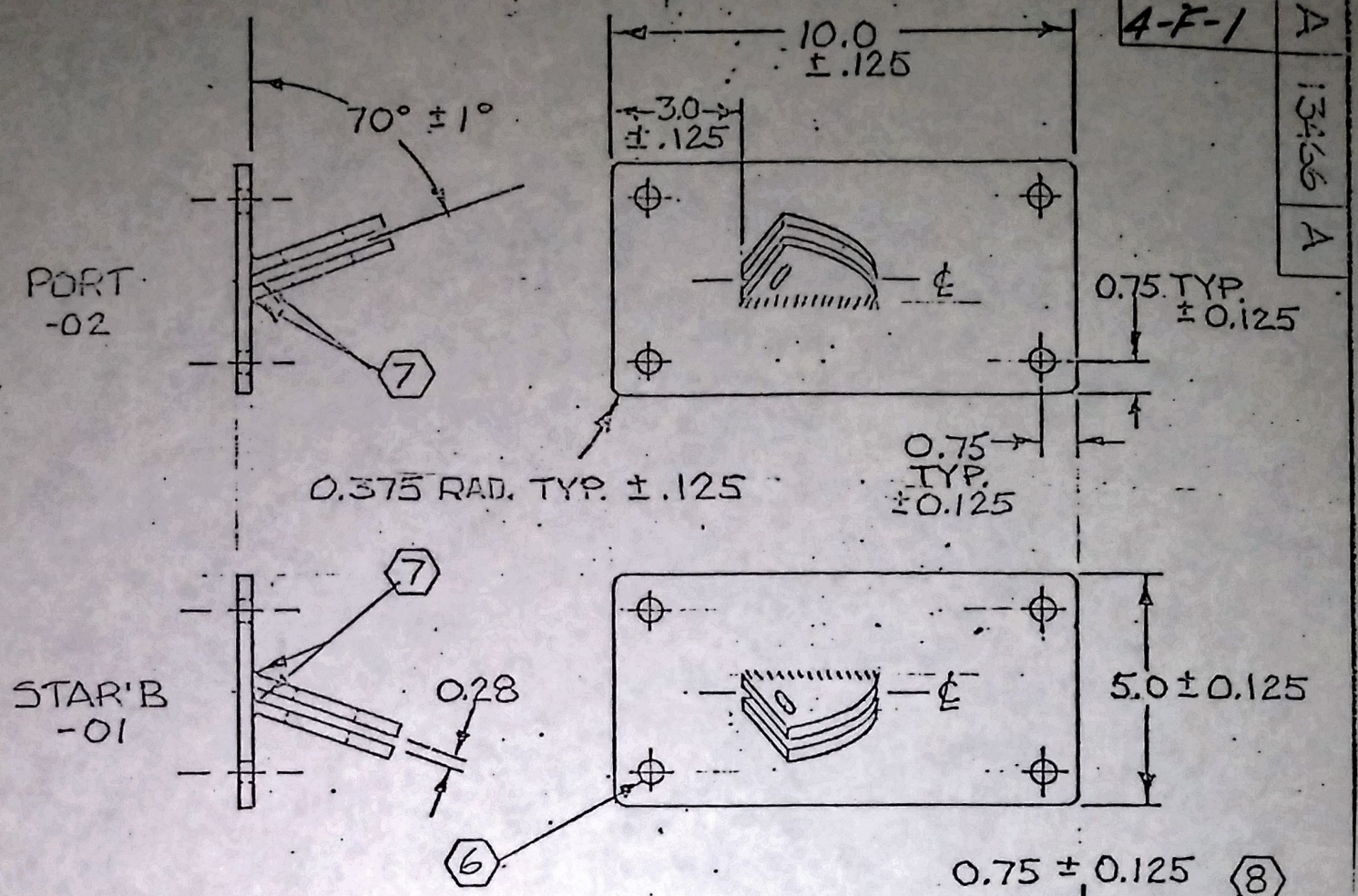


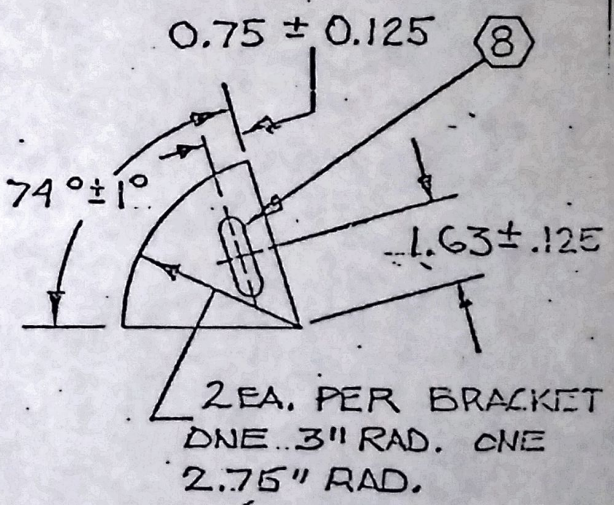


NOTES:

1) DO NOT SCALE DWG.
2) ALL DIMENSIONS ARE IN INCHES.
3) TOLERANCES ±0.015 UNLESS OTHERWISE NOTED.
4) USE 1/4" 304 S.S.
5) PORT BRACKET MIRROW IMAGE OF STARBOARD
6) DRILL 0.515" DIA. 4 PLACES.
7) ALL WELDS TO BE 1/4" FILLETS.
8) SLOT 0.515" x 1.25" L.G.
9) DEBURR + BREAK SHARP EDGES.
10) ELECTRO-POLISH FINISHED PARTS.

| LTR | ENG. CHANGE NO. | DATE |
|---|---|---|
| A | #426 PAK | 6/7[illegible] |

REVISIONS

WESTSAIL®
275 McCormick, P.O. Box 1828
Costa Mesa, California 92626
Telephone: (714) 549-9711

APPLICATION: NEXT ASSY | USED ON: W42, W43

BRACKET, BOWSPRIT, PORT + STAR'B, AFT, W42, [illegible]

| DRAWN | DATE | MANUAL PAGE NUMBER |
|---|---|---|
| PAK | 6/7[illegible] | |

SIZE: A | DWG. NO.: 13466

SCALE: NONE | SHEET 1 OF 1

NOTE: VENDOR TO INSTALL WIRING IN. PULPIT FOR LIGHTS. WIRE TO BE TYPE SJO 18-2 4-F-2

A 13494 G

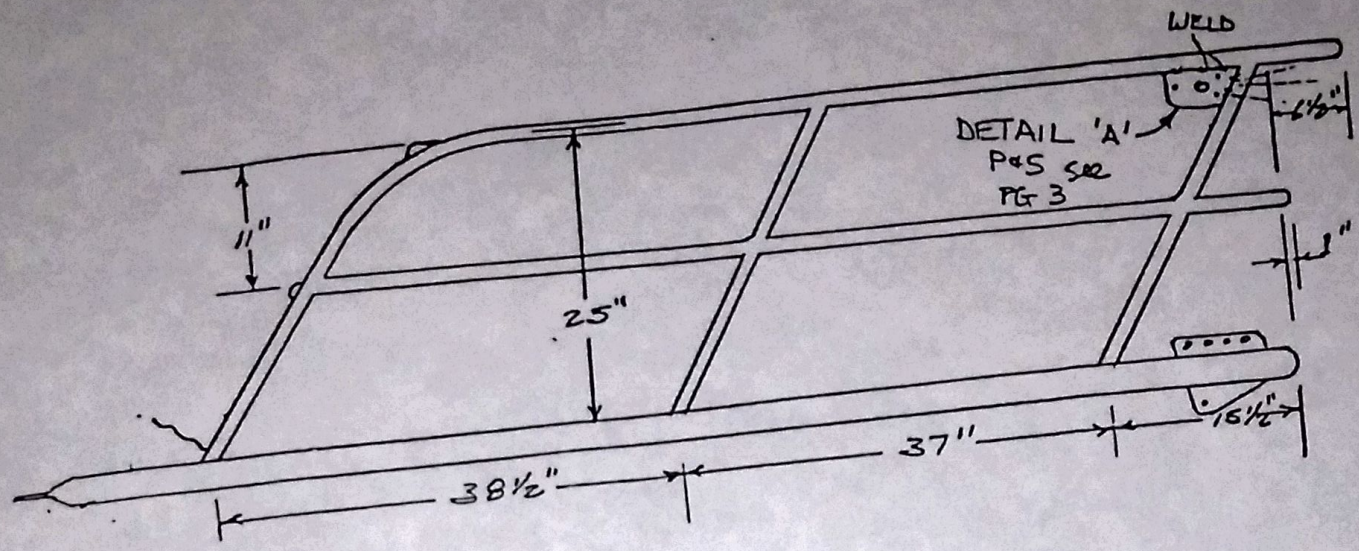


NOTE: WELD PULPIT TO BOWSPRIT.
MATL: STAINLESS STEEL 304
1" TUBING - POLISH ALL SURFACES

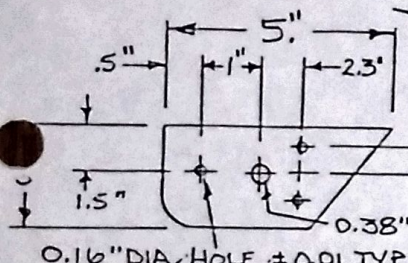


DETAIL 'A' USE 20GA 304 S.S.
TOLERANCES: ±0.1"
P&S BOW LIGHT MOUNTING PLATE

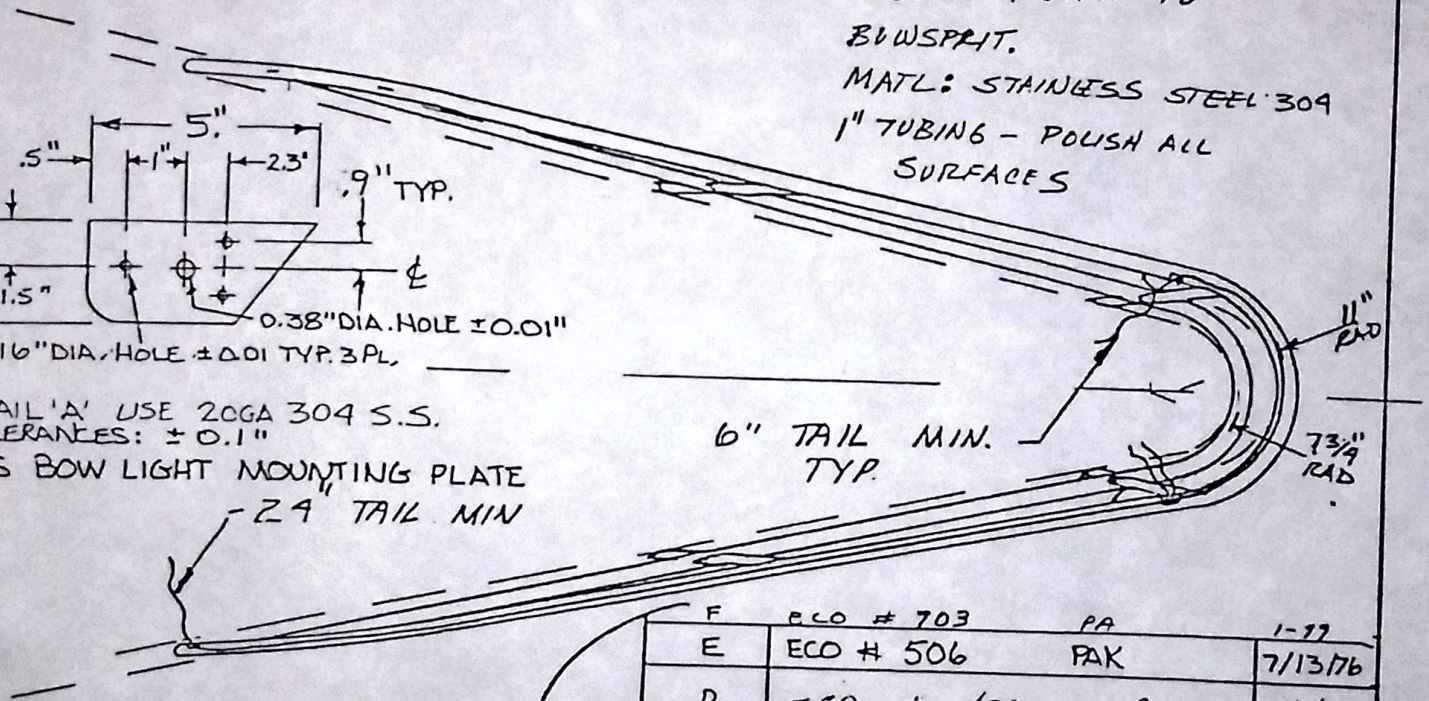


| | | | |
|---|---|---|---|
| F | ECO # 703 | PA | 1-77 |
| E | ECO # 506 | PAK | 7/13/76 |
| D | ECO # 126 | PAK | 6/6/76 |
| C | ECO # 289 | SD | 3/12/76 |
| B | ECO # 269 | G. WARD | 2-25-76 |
| G | ECO # 762 | G. WARD | 3/7/77 |

| DESCRIPTION | QTY | NO | DESCRIPTION | QTY |
|---|---|---|---|---|

WESTSAIL CORP., COSTA MESA, CA.

SCALE 1/4"=1'
DRAWN JC
DATE 6-17-74

TITLE PULPIT, BOW & SPRIT ASS'Y W-42, 43

A 13494 G

REVISED 7/13/76

SHT. 1 OF 2

4-F-2

1) ALL DIMENSIONS IN INCHES
2) DO NOT SCALE DWG.
3) TOLERANCES .XX = .060 .XXX = .010
4) MTRL - 1/16" 304 SS
5) FINISH - ELECTRO POLISH WITH FULL ASSEMBLY
6) REMOVE BURRS, BREAK SHARP EDGES
7) THIS BRACKET REPLACES "DETAIL A" ON DWG 13494 WHEN 'PB YACHTLIGHTS' ARE DESIRED.

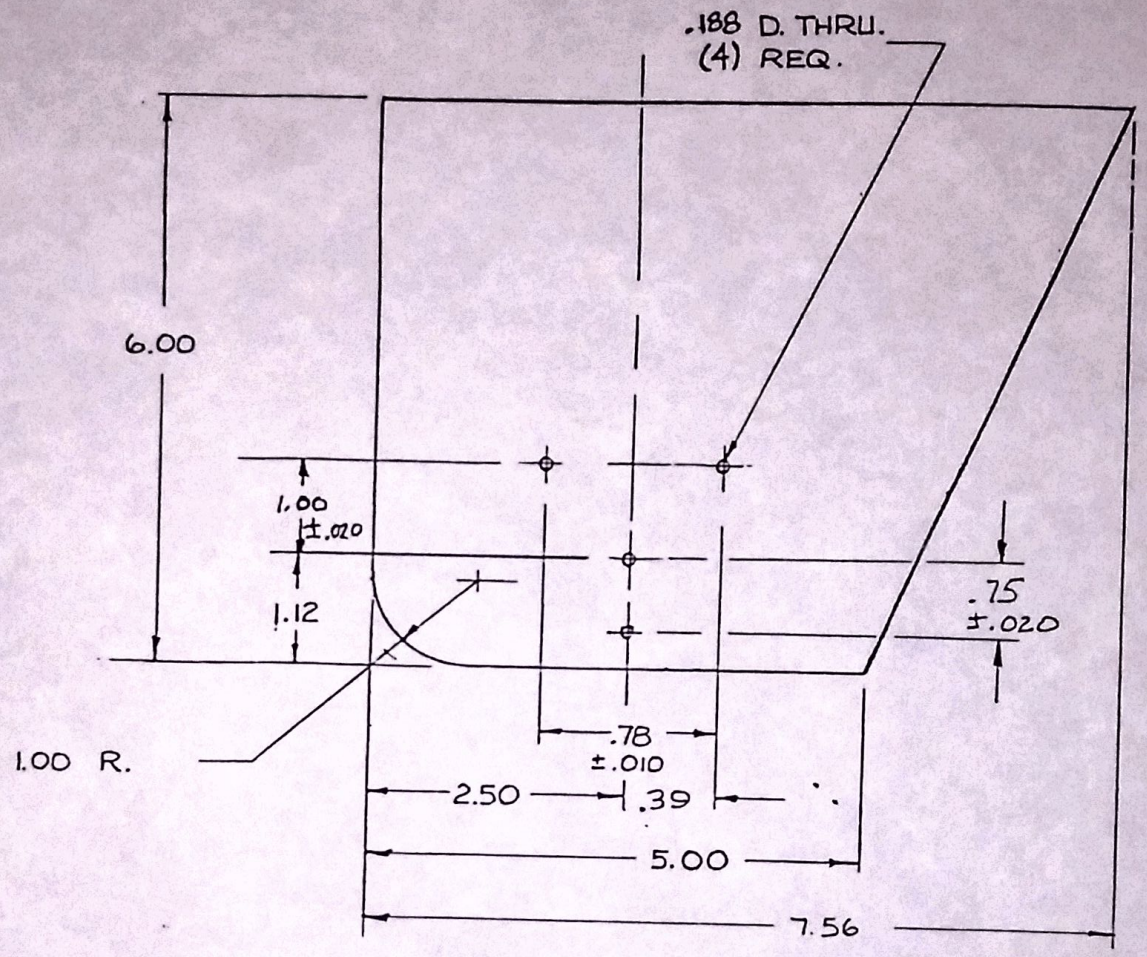


| QTY | PART NUMBER | DESCRIPTION | ITEM |
|---|---|---|---|

PARTS OR MATERIAL LIST

WESTSAIL®
275 McCormick, P.O. Box 1828
Costa Mesa, California 92626
Telephone: (714) 549-9711

PULPIT, BOW & SPRIT ASSY W42-43

| DRAWN | DATE | MANUAL PAGE NUMBER |
|---|---|---|
| PHIL ARNOLD | | |

| LTR | ENG. CHANGE NO. | DATE |
|---|---|---|
| REVISIONS | | |

| NEXT ASSY | USED ON |
|---|---|
| | W 42-43 |

APPLICATION

SCALE 1/2" = 1"

| SIZE | DWG. NO. | REV. |
|---|---|---|
| A | 13494 | G |

SHEET 3 OF 3

13494 G

# W-42 ANCHOR ROLLER KIT

| QTY | P/N | DESCRIPTION | COST | TOTAL CO |
|---|---|---|---|---|
| 2 | 13259 | ANCHOR ROLLER BRZ/W BUSHING S-S. | 15.75 | 31.50 |
| 4 | 13262 | WASHERS TEFLON | 1.31 | 5.24 |
| | | | | 36.74 |

PRICE PER EACH ROLLER W BUSHING & WASH

41.00

PRICE FOR TWO ROLLERS W BUSHING & WAS.

82.00

4-F-.12

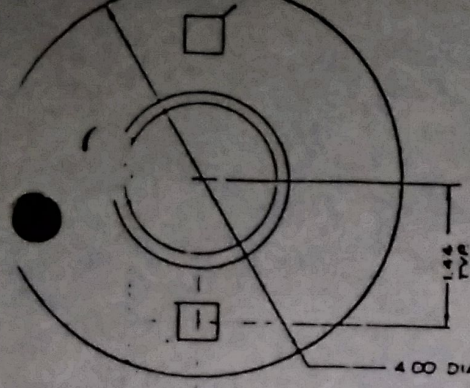


PAD DETAIL

1) MATRL 1/4" 304 SS
2) HOLES TO BE ORIENTED VERTICALLY

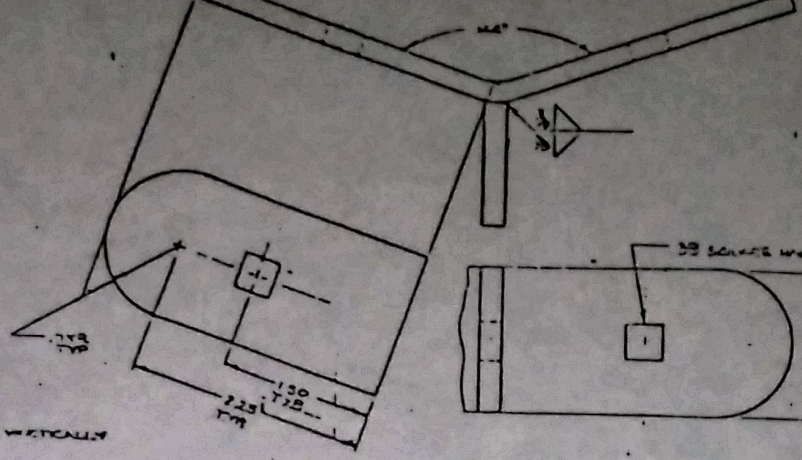

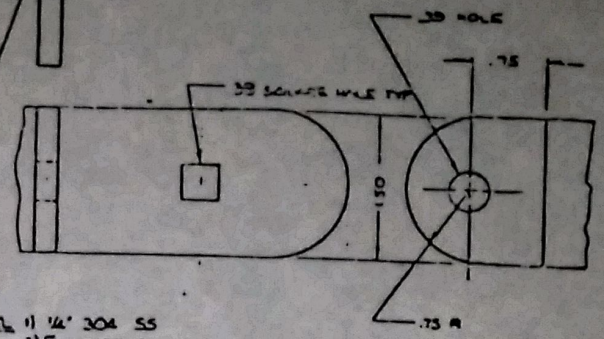


MATRL 1) 1/4" 304 SS
2) ELECTRO POLISH AND BUFF

HULL BRACKET DETAIL
PART NO. 20017-01

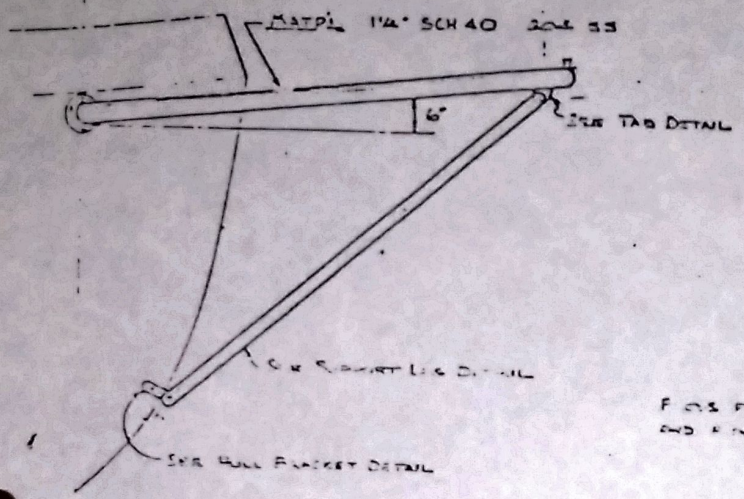


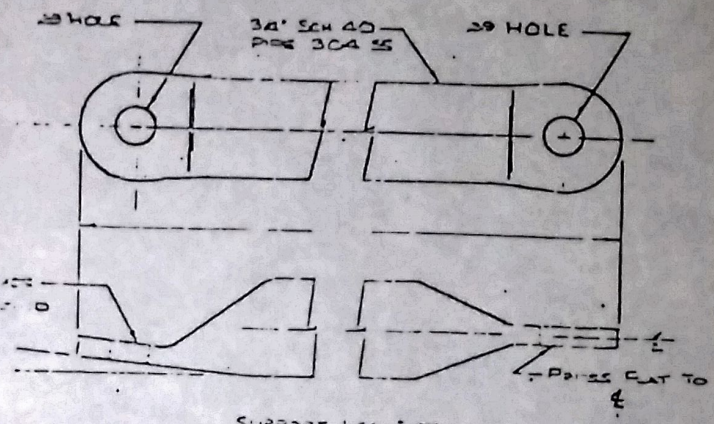


SUPPORT LEG DETAIL
PART NO. 20017-02 (2 REQUIRED)

| PART NUMBER | DESCRIPTION |
|---|---|
| 20017-00 | COMPLETE ASSEMBLY |
| 20017-01 | HULL BRACKET |
| 20017-02 | SUPPORT LEG |
| 20017-03 | BOWSKIN |

NOTE: THIS ASSEMBLY WILL NOT WORK WITH SAILS SELF STOWING.

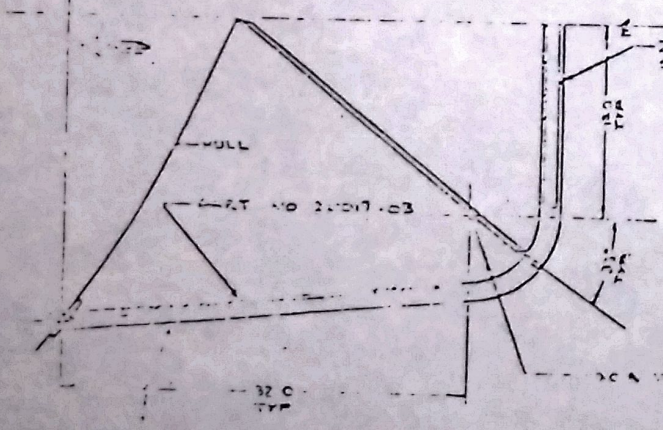


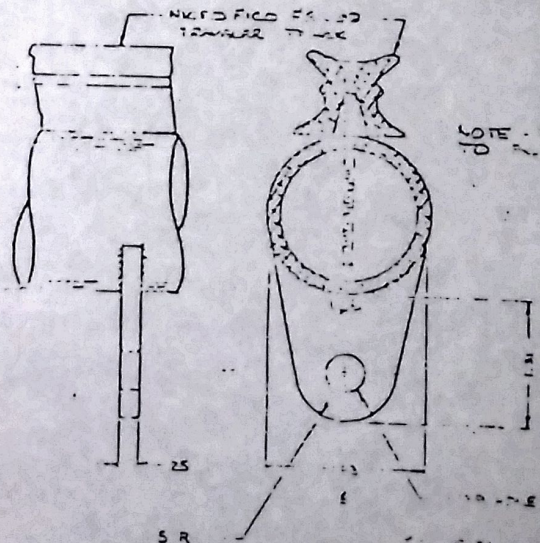


BOOMKIN, YAWL W42,93

4-H-3

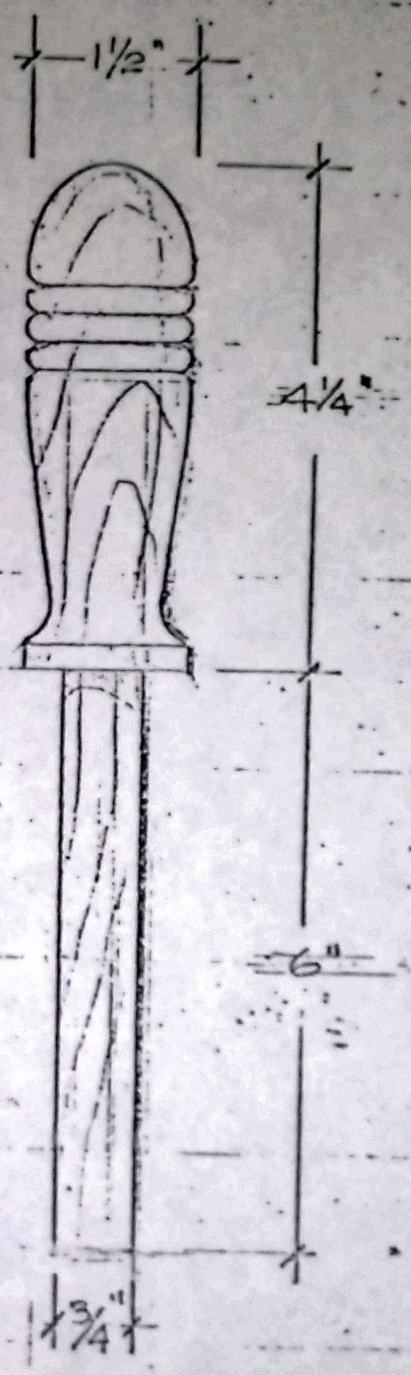


| DESCRIPTION | | QTY | NO | DESCRIPTION | QTY |
|---|---|---|---|---|---|
| WESTSAIL CORP., COSTA MESA, CA. | SCALE ½" | TITLE BELAYING PINS | | A 14055 | A |
| | DRAWN [illegible] | | | REVISED | |
| | DATE 11/21/73 | | | | |

4-H-3

D

17199

NOTE:

1) 2 SETS REQUIRED PER BOAT
2) TO BE ASSEMBLED WITH MAST PULPIT W43 (PN 13496)
3) FINISH - EXTERIOR TEAK OIL

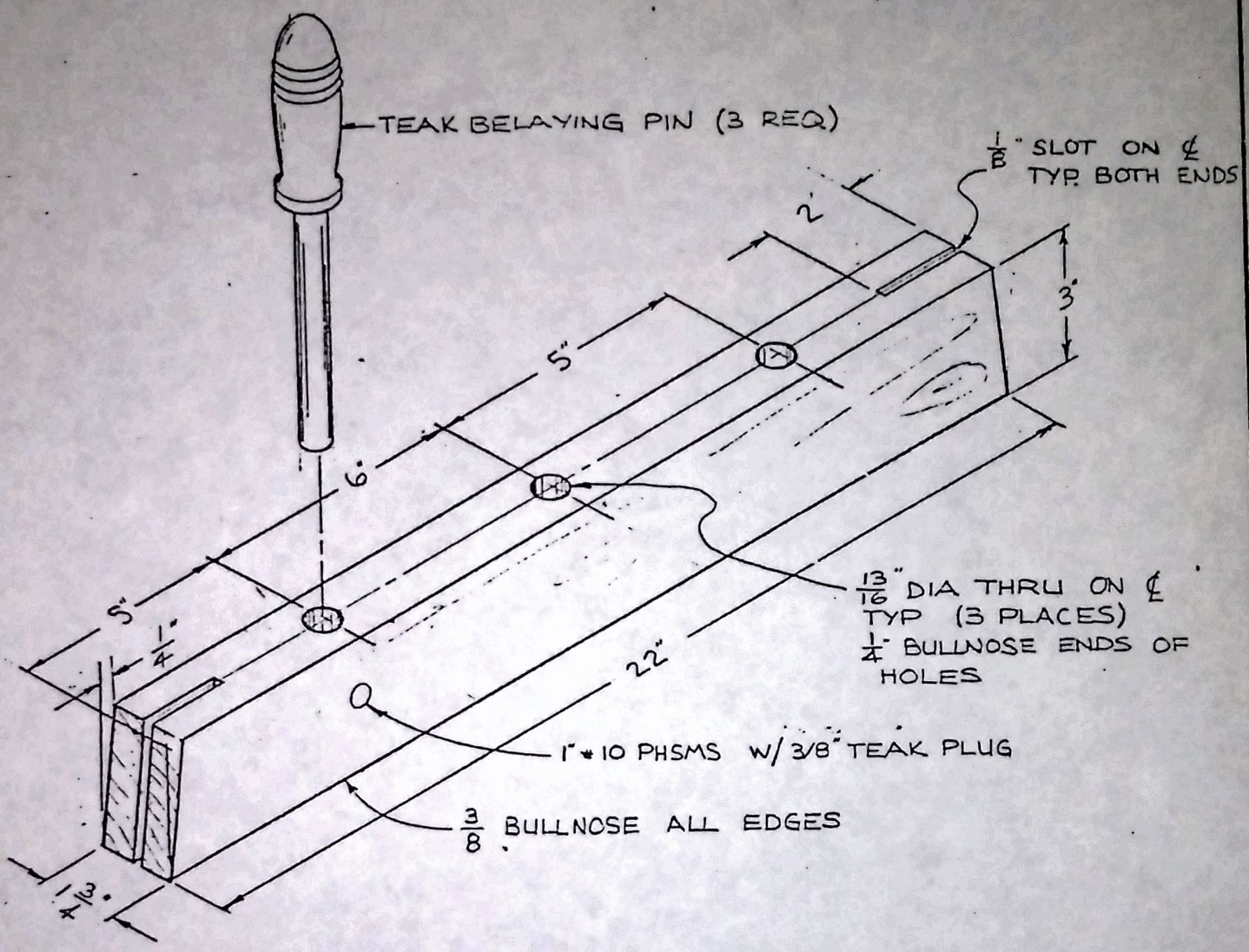


| QTY | PART NUMBER | DESCRIPTION | ITEM |
|---|---|---|---|
| .01 | 14404 | GLUE, RESORCINAL | |
| 3 | 14117 | PLUG TEAK 3/8" | |
| 3 | 14065 | TEAK BELAYING PIN | |
| 3 | 10313 | SCREW 1" #10 PHSMS | |
| .05 | 14367 | TEAK OIL - EXTERIOR | |
| .92 | 14187 | 8/4 S2S TEAK | |

PARTS OR MATERIAL LIST


WESTSAIL®
275 McCormick, P.O. Box 1828
Costa Mesa, California 92626
Telephone: (714) 549-9711


PINRAIL, BELAYING TEAK, W-43

| DRAWN | DATE | MANUAL PAGE NUMBER |
|---|---|---|
| PHIL ARNOLD | 9-76 | |

| SIZE | DWG. NO. | REV. |
|---|---|---|
| A | 17199 | A |

SCALE NONE

SHEET 1 OF 1

| LTR | ENG. CHANGE NO. | DATE |
|---|---|---|
| A | 572 | 9/76 |

REVISIONS

| APPLICATION | |
|---|---|
| NEXT ASSY | USED ON |
| | W-43 |

| BOAT | A | C | D | E | F | DASH |
|---|---|---|---|---|---|---|
| W-28 | 32" | 7" | 6" | 1" | 1" | -01 |
| W-32 | 36" | 6" | 9" | 2" | 2 1/4" | -02 |
| W-42 | 48" | 10" | 9" | 2" | 2" | -03 |

4-H-3

17179 C

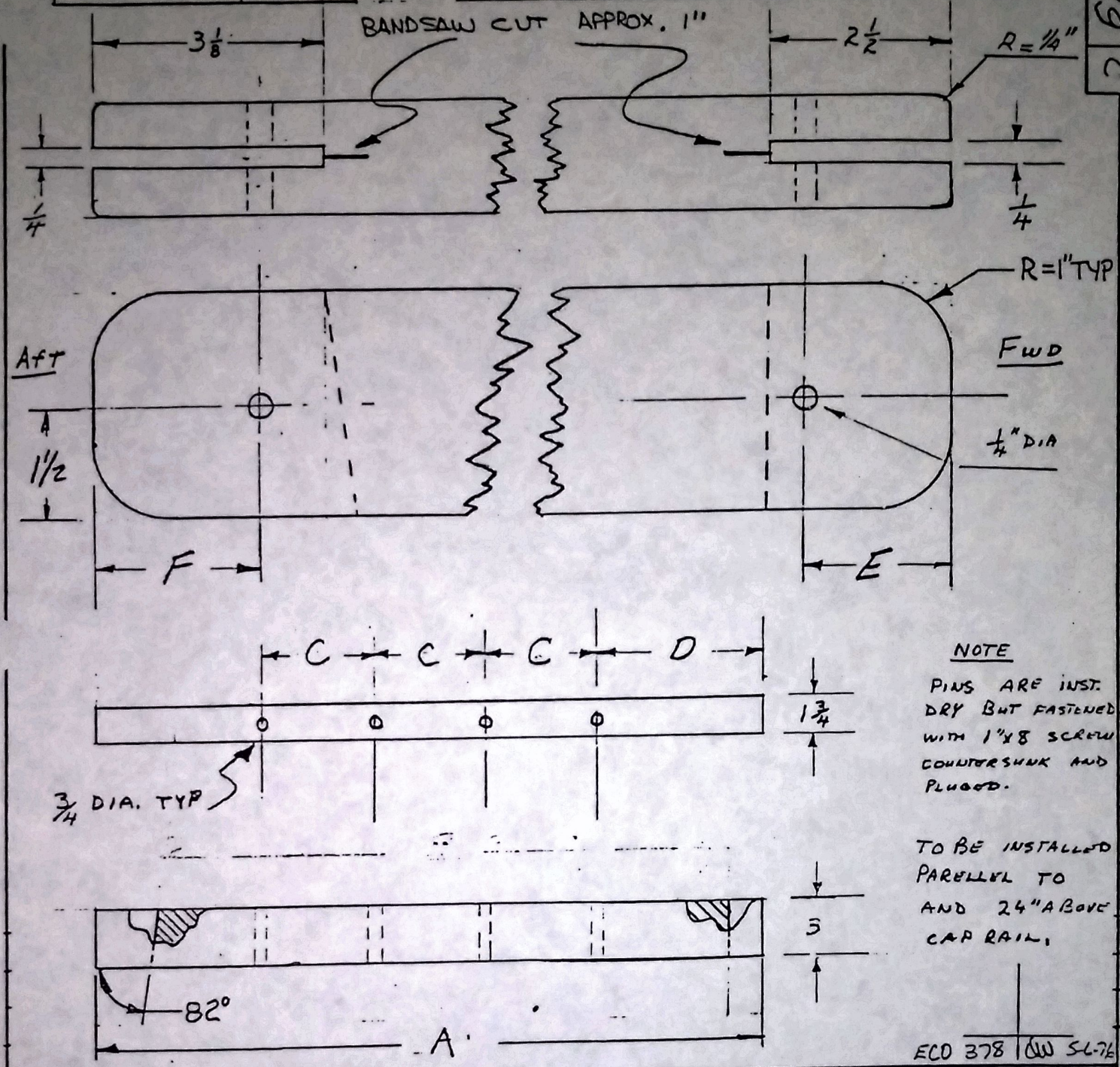


NOTE

PINS ARE INST. DRY BUT FASTENED WITH 1"x8 SCREW COUNTERSUNK AND PLUGGED.

TO BE INSTALLED PARELLEL TO AND 24" ABOVE CAP RAIL.

ECO 378 | DW 5-6-76

| NO | DESCRIPTION | QTY | NO | DESCRIPTION | QTY |
|---|---|---|---|---|---|
| 1 | 36"x 3"x 1 3/4" TEAK #14187 | 2 | 6 | NUT 1/4-20 SS #10163 | 4 |
| 2 | BELAYING PINS #14065 | 8 | 7 | 3/8" TEAK PLUGS #14117 | 8 |
| 3 | 1"x10 FHSMS #10292 | 8 | | | |
| 4 | 2"x 1/4-20 F.H.M.S. #10333 | 4 | | | |
| 5 | FLAT WASHER SS 1/4" #10125 | 4 | | | |

| | | | | |
|---|---|---|---|---|
| WESTSAIL CORP., COSTA MESA, CA. | SCALE | TITLE PINRAIL BELAYING W-28 & W-32, W-42 | A 17179 | C |
| | DRAWN RA | | REVISED 5/10/76 | |
| | DATE 1-6 | | | |